2020-2021

LONG-RANGE FACILITY PLAN

Gervais School District

IBI GROUP + GERVAIS SCHOOLS est. 1834

ACKNOWLEDGMENTS

LONG-RANGE FACILITY PLANNING COMMITTEE

Amanda Braswell	Language Arts Teacher, Middle School
Andrew Aman	Assistant Principal, High School
Bibiana Salazar	Parent
Bob Martin	Principal, Middle School
Courtney Karns	Elementary Music
Creighton Helms	Principal, Elementary School
Dandy Stevens	Superintendent
Gustavo Muñoz	Custodial/Maintenance Manager
Henry Bustamante	Vice Chair
Isabel Contreras	High School Student
Megan Dilson	Agriculture Teacher, High School
Melinda Fitz-Henry	Food Services Manager
Melissa Ayala	Instructional Assistant
Michael Mulkerin	Math Teacher, Middle School
Renee Willer	Datavision Communications
Sofia Guzman	Secretary, Elementary School
Toni Johnson	Social Studies Teacher, Middle School
Tracy Lewis	Technology Director
Vilma Chan Vasquez	Counselor

WITH PROFESSIONAL ASSISTANCE FROM

Jason Tornquist	tk1sc Engineers
Kate Barbaria	IBI Group Architects
Kristine Merkel	IBI Group Architects
Rebecca Stuecker	IBI Group Architects
Steve Winkle	IBI Group Architects

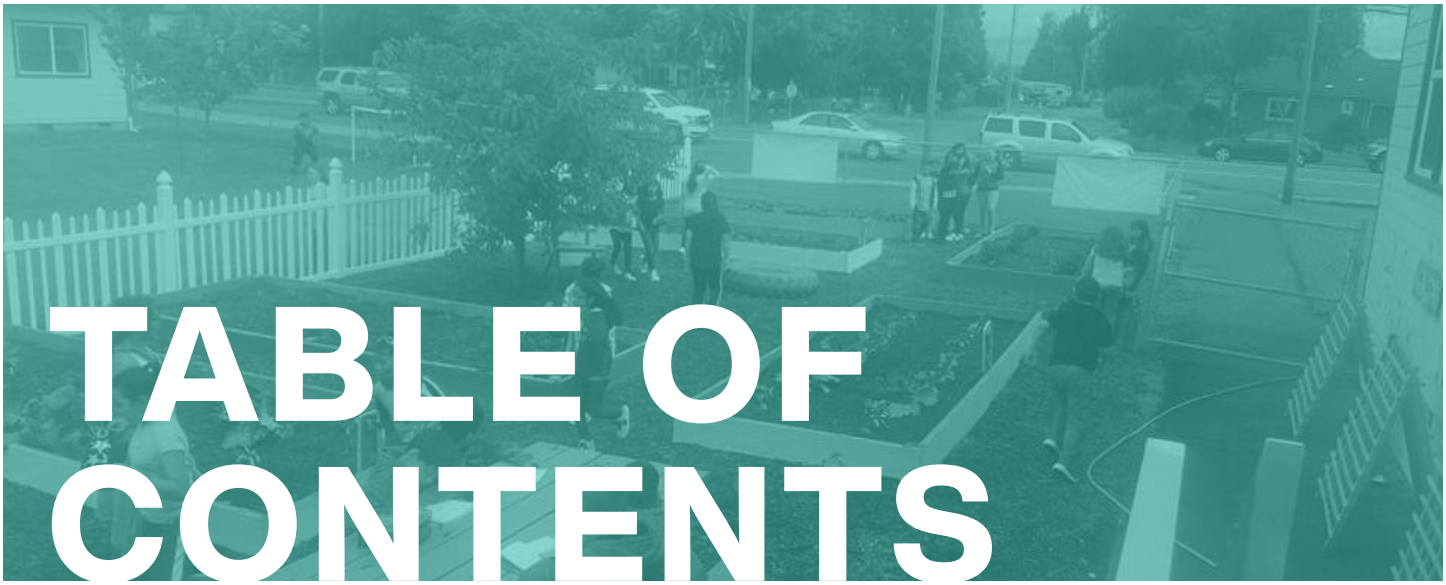

TABLE OF CONTENTS

1	**GATHERING THE FACTS**	**1**
	Overview of the District	1
	Building and Site Utilization Plans	4
	Assessments	10
	Educational Adequacy Summary of Findings	12
	Population Projections and Capacity Analysis	21
	Capacity Analysis	24
2	**PLANNING FOR THE FUTURE**	**27**
	The Planning Committee	27
	Vision and Guiding Principles	29
	Defining How we Achieve our Vision	32
	A Value-Based Plan for the Future	43
	APPENDIX	**46**
	OAR 581-027-0040 Compliance Guide	
	Population Projection Report	
	Facility Assessment Report	
	Seismic Evaluation Report	

THIS PAGE IS INTENTIONALLY LEFT BLANK
FOR PRINTING PURPOSES

01

GATHERING THE FACTS

THIS PAGE IS INTENTIONALLY LEFT BLANK
FOR PRINTING PURPOSES

01

GATHERING THE FACTS

OVERVIEW OF THE DISTRICT

Gervais School District is located in the town of Gervais, Oregon, on US Highway 99E, 4 miles south of Woodburn and 15 miles north of Salem.

The District was established in 1834 and serves 1,340 students in traditional and charter schools in Marion County. The District operates one elementary, one middle, and one high school on adjoining properties. Each school includes multiple separate buildings that operate as a single school campus. In total, the District operates approximately 14 separate buildings.

1. District Office
2. Elementary School
   a. Main Building
   b. K–2 Building
   c. Gym/Cafeteria Building
   d. Annex/Classroom Building
3. Middle School
   a. Main Building
   b. 8th Grade Building
   c. Athletic Building
4. High School
   a. Main Building
   b. Shop Building
5. Welcome Center/CTE Classroom
6. PreSchool
7. Daycare
8. Samuel Brown Academy

LONG-RANGE FACILITY PLAN

The Gervais School District Long-Range Facility Plan (LRFP) presents a long-term vision for facilities to accommodate District operations and educational programs. It has been prepared in compliance with ORS 195.11 and Oregon Administrative Rule (OAR) 581-027-0035. This report reflects the work of the Gervais School District LRFP Committee over a five-month process culminating in March 2021.

DISTRICT GOALS
2020–2021

Develop and adopt a district wide equity lens tool to be used in all areas of work throughout the district in order to support all students achieving to their highest academic potential.

Prioritize addressing social and emotional learning and mental health supports for students and staff to foster educational environments where students are surrounded by well-trained staff resulting in students being prepared to learn. Staff will be equipped with the necessary supports and trainings to create this environment.

Facilitate long-term planning for the district that is responsive to community growth and student learning needs.

BUILDING AND SITE UTILIZATION

GERVAIS ELEMENTARY SCHOOL

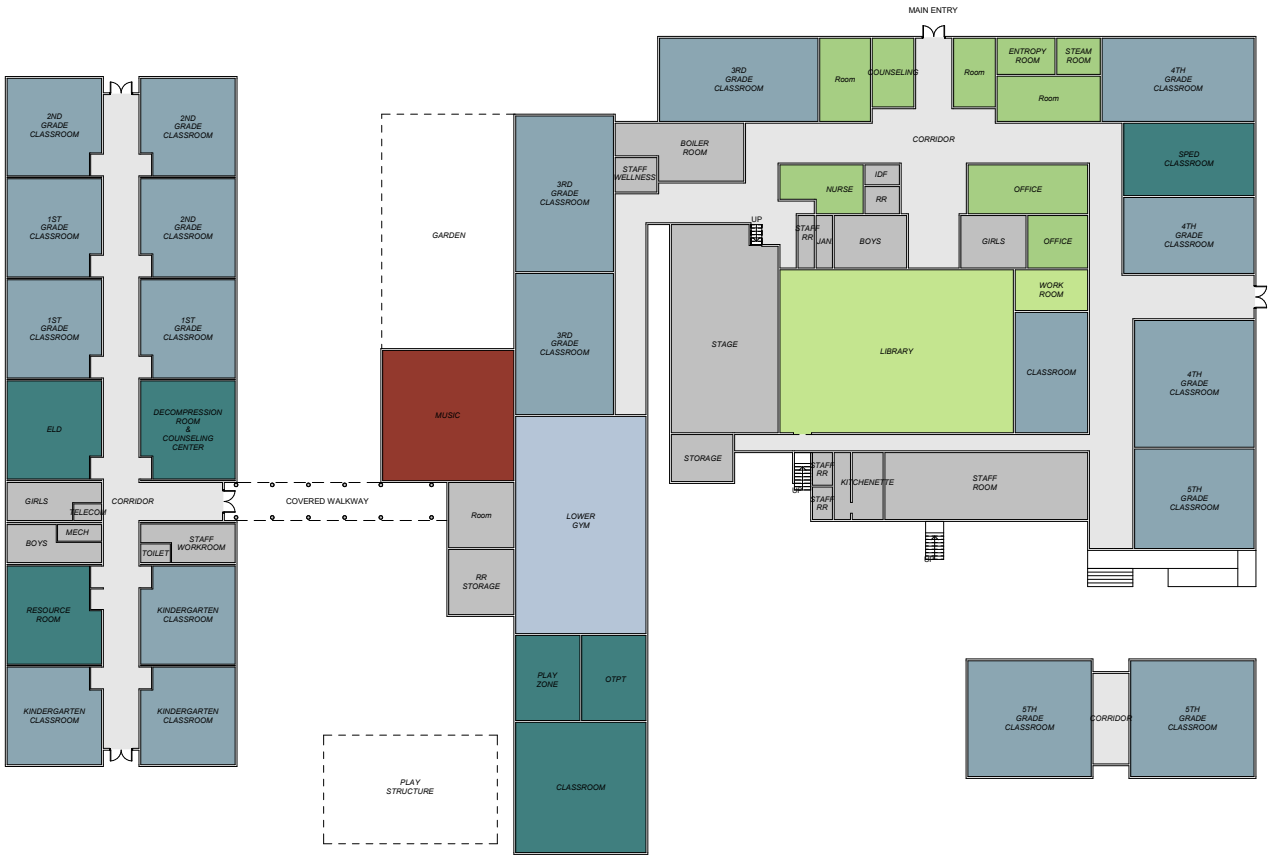

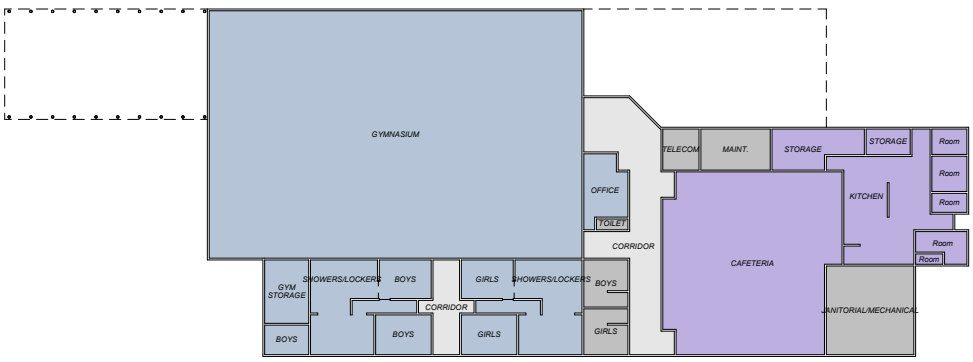

DEPARTMENT LEGEND

- Administration and Counseling
- Building Support
- Circulation
- Dining and Nutrition
- Fine and Performing Arts - Music
- Core Academics - Gen ED
- Library
- Physical Education/Athletics
- Special Education

CURRENT USE

Gervais Elementary School is a one-story, four-structure school that serves kindergarten through fifth grade. The main building was constructed in 1934 and houses the main entry and administrative offices, library, music room, staff room, and third through fifth grades. Two of the three fifth grade classes are taught in a modular building just south of the main building, which was added in 1973. Kindergarten, first and second grade are taught in a pre-engineered structure to the northwest corner of the site, which was completed in 2013 and is referred to as the K–2 building. Specialized educational spaces for English Learning Development (ELD), Resource Room, decompression room, and counseling center are located in the K–2 building. The Functional Learning Center (FLC) is located in the main building. The fourth building on the elementary school campus (completed in 1990) includes the gymnasium, kitchen, and cafeteria. The campus includes two play structures and covered play adjacent to the gymnasium building. Because the facility was originally designed for middle school use, this building also includes locker rooms which are not used by the elementary programs.

1934
Built

1973, 1990, 2013
Remodels and/or Additions

465
Student Capacity

K–5
Grades

BUILDING AND SITE UTILIZATION

GERVAIS MIDDLE SCHOOL

DEPARTMENT LEGEND

- Administration and Counseling
- Building Support
- Circulation
- Core Academics - Science
- Core Academics - Gen ED
- Library
- Physical Education/Athletics
- Special Education

CURRENT USE

Gervais Middle School is a one-story, three-structure school located on a site between the elementary and high schools. The main office, library, counseling center, and core subjects for sixth and seventh grades are taught in the main structure (completed in 2013) which is a pre-engineered building identical to the elementary school's K–2 building. 8th grade classes are taught in an adjacent structure (originally built in 1999, relocated to this site in 2015), and a third building (completed in 2015) houses the athletic center gymnasium and locker rooms. Middle school students travel to the high school for electives and additional library services. Middle school students also travel to the high school for all dining activities as there is no cafeteria or kitchen at the current middle school.

1999
Built

2013, 2015
Remodels and/or Additions

233
Student Capacity

6–8
Grades

BUILDING AND SITE UTILIZATION

GERVAIS HIGH SCHOOL

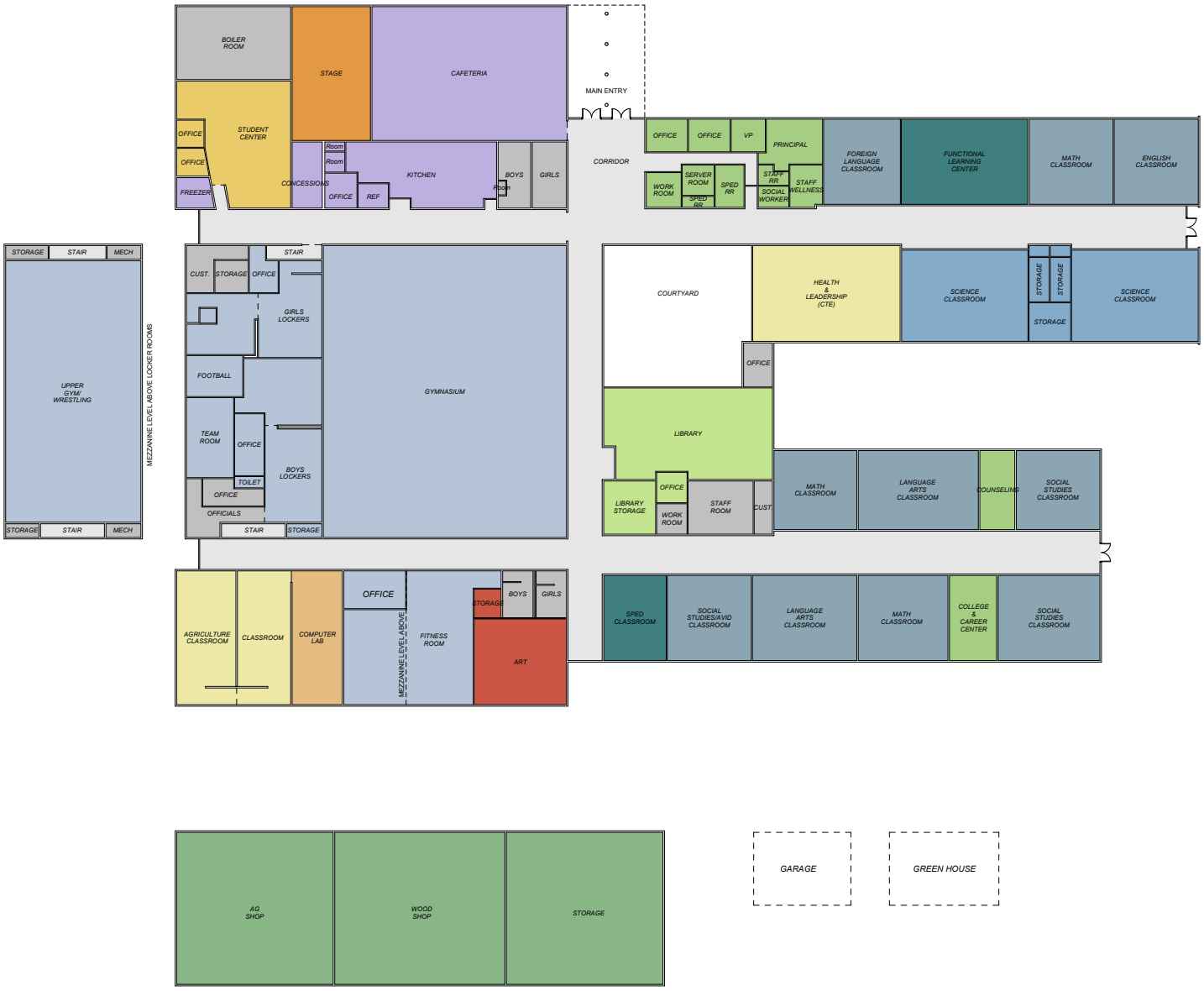

DEPARTMENT LEGEND

- Administration and Counseling
- Building Support
- Circulation
- Computer Lab
- Core Academics - Science
- Core Academics - Gen Ed
- CTE
- Dinning and Nutrition
- Extended and Small Group Learning
- Fine and Performing Arts - Visual Arts
- Fine and Performing Arts - Theater
- Library
- Maker Space
- Physical Education/Athletics
- Special Education

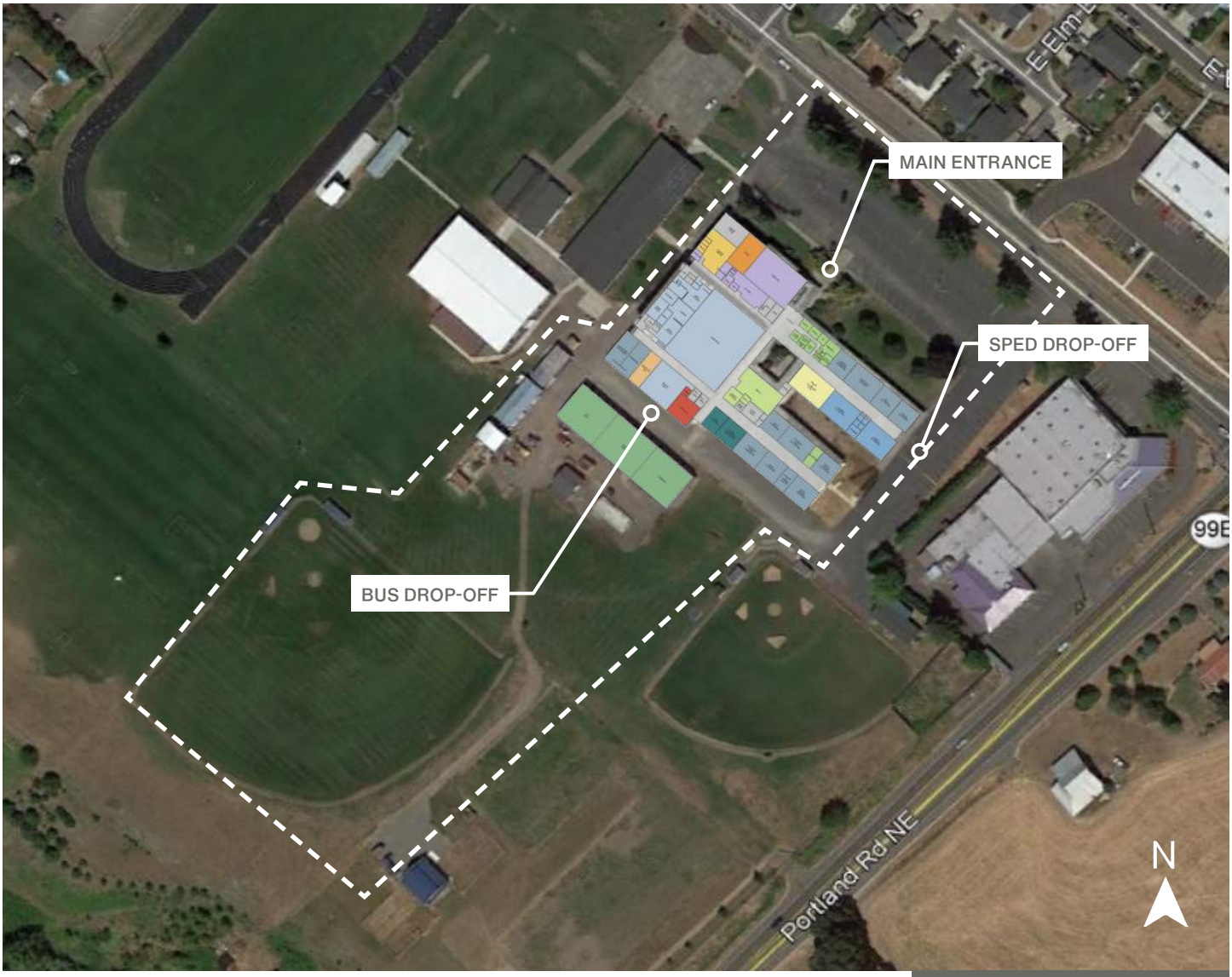

CURRENT USE

Gervais High School is a one-story (aside from an athletics and fitness mezzanine level), three-structure facility. The school offers core curriculum classes, electives, and Special Education (SPED) courses in the main building (built in 1963) including the sixth through 12th grade FLC. A large shop to the south, which was constructed in 2009, supports Career Technical Education (CTE) courses including Agriculture, Building Tech, Welding, etc. Site amenities include track and field facilities that are shared with the middle school, softball, baseball, and football fields. There is an outdoor loading and work zone adjacent to the CTE shops.

1963
Built

2009
Remodels and/or Additions

392
Student Capacity

9–12
Grades

ASSESSMENTS

FACILITY AND SEISMIC EVALUATION

The facility assessments for Gervais School District were conducted in the fall/winter of 2019 in order to understand the physical conditions of the school buildings. Assessments were completed for the elementary, middle, and high school buildings as well as the district main office building, Welcome Center/CTE Classroom, Preschool, Daycare, and Samuel Brown Academy.

The assessments are based on the Oregon Department of Education's (ODE) assessment guidelines (OAR 581-027-0035) and were conducted using the ODE template led by a state certified assessor and licensed architect.

The full report, which includes the assessment field instrument, summary of findings, and list of recommendations to meet the deficiencies described, is included in the appendix. A prioritization of major, moderate, and minor repairs are included at the end of this report.

SEISMIC EVALUATION

The seismic evaluations for the multiple buildings of all three schools were completed in the spring of 2020. The evaluations were conducted according to the Tier 1 screen procedure per ASCE/SEI 41-17 and were conducted by a licensed structural engineer. Structural components were evaluated to the "Limited Safety" performance level and non-structural components were evaluated to the "Hazards Reduced" performance level.

The full report, which includes a summary of deficiencies and list of recommendations for further investigation and possible upgrade solutions, is included in the appendix.

HISTORIC RELEVANCE

None of the school facilities operated by Gervais School District are listed on the Oregon Historic Sites Database by the State Historic Preservation Office, nor are they listed on the National Register of Historic Places.

EDUCATIONAL ADEQUACY

WHAT IS EDUCATIONAL ADEQUACY?

How do the physical aspects of the building and site support teaching, learning, and social-emotional well-being? How do they adequately support the instructional mission and methods? Educational Adequacy is an essential component to be considered by school communities as they attempt to prepare aging facilities for a modern educational model/paradigm and includes an analysis of the facilities' ability to meet current national educational adequacy standards.

ASSESSMENT METHODOLOGY

Our assessor teams include accredited Educational Planners and licensed architects who collaborate with school communities to determine how facilities compare to school community-defined standards according to educational adequacy categories listed in this report.

This assessment process took place during the 2020/2021 school year during the COVID-19 global pandemic. So although assessors were able to walk through the facilities and interview each principal, the District had moved to a model of Comprehensive Distance Learning for almost all students, resulting in school buildings that were nearly empty. All teacher listening sessions were conducted via online meeting platforms, and student input was achieved via online surveys.

STAKEHOLDER INPUT

In September 2020, IBI Group assessors spent a day meeting with the principals of all three schools. During that time, assessors toured the buildings, surrounding site, and discussed the current functions of each space (described in the building utilization plan) and the ability of the spaces to meet the needs of those functions. Assessors also conducted an interview with the District Superintendent to discuss long-term strategic goals and programs.

Shortly after touring the facilities and speaking with District administrators, the assessment teams held listening sessions with teachers and staff and issued student surveys. There were 70 total participants in the teacher/staff listening sessions and 127 total student survey participants representing grades four through 12. On the whole, one stakeholder group did not contradict the needs and priorities of any other stakeholder group. The summary of findings listed in this report is a compilation of the feedback gained from each event.

EVALUATION METHODOLOGY

Principal Interviews

Building Tours

Student Surveys
4th–12th Grades
127 Participants

Teacher and Staff Listening Sessions and Surveys
All schools represented
70 participants

EDUCATIONAL ADEQUACY SUMMARY OF FINDINGS

GERVAIS ELEMENTARY SCHOOL

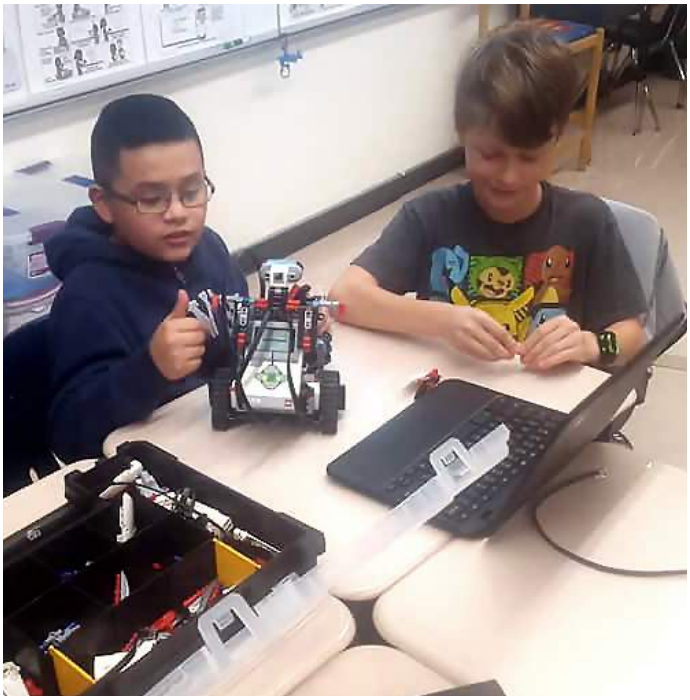

EDUCATIONAL PROGRAM SUPPORT

The Elementary School is working to build a Science, Technology, Engineering, the Arts, and Mathematics (STE(A)M) identity. The current facility does not adequately support project-based and hands-on learning. There is a need to have more spaces for small, medium, and large groups of students to design, build, store, and present their projects. The principal's office is currently used as a STE(A)M lab where materials are stored. The library is a large space and underutilized and could be upgraded to include a STE(A)M classroom. Resource rooms occupy two classrooms. The FLC is adjacent to the lower gym and has recently added walls to create an Occupational Therapy/ Physical Therapy (OT/PT) room and play zone adjacent to the classroom. The District uses the Multi-Tier system of supports for academic intervention. Tier 3 requires pull-out support. K–2 students needing those supports must travel to the main building. Individualized Education Program (IEP) meetings are held in resource rooms or classrooms.

CHARACTERISTICS OF TEACHING SPACES, EQUIPMENT, AND STORAGE

Because the original school has been added on over time, there is a variety in the size and shape of the classrooms. Some are large and others are small and narrow. All of the classrooms in the K–2 building are the same size but are very small, less than 650 sq. ft. Three classrooms in the main building do not have sinks. During the COVID-19 pandemic, mobile handwashing stations are used in those rooms. The furniture in the main building is several decades old and is heavy. More than any other element, teachers report a need for flexible, differentiated, and mobile furniture and storage in their classrooms as the greatest need. Teachers do their prep work in their classrooms and use a large area to spread out materials. Teaching assistants and staff use either the library or office. Staff report a general lack of offices and conference rooms for meetings.

ENVIRONMENTAL CHARACTERISTICS

There is one interior room in the building that does not have heating/ventilation or AC. Generally speaking, the boiler heating system is quite old and loud when it is turned on. Teachers do not typically use voice enhancement, and noise transmission is not a great concern.

RELATIONSHIP OF EDUCATIONAL SPACES

The school is split into multiple buildings which can make it difficult to have a unified culture. Some staff reported feeling like there is a "divide" between teachers of different buildings and even teachers who are on different sides of the main building. There is currently no breakout space outside of classrooms. Students do group work in the classrooms, very little takes place in the hallways. Teachers quickly lose visibility of students who leave the room and teachers have requested windows into the hallway. This is especially an issue in the K–2 building where cameras have been installed to monitor hallways.

SUPPORT SPACE FUNCTIONALITY

Some of the administrative staff, including the principal, do not have offices — and they do not miss them. Those spaces are more useful as other programmed spaces. The library, cafeteria, and gym are all generous in size since the school was originally designed as a middle school. The cafeteria is great for student dining, but not as functional as a community meeting space due to the poor PA system and seating. The kitchen is functional but quite old. Staff report that the furniture in the library where staff meetings take place is uncomfortable for adults. The gym is currently used for school performances and presentations, but there is a strong desire from teachers to have a more formal and appropriate space for students to show off their work.

WELCOMING AND INCLUSIVE

The main entry of the school includes a wheelchair lift. It would be nice to make this a more universally welcoming entry. There is one counselor and counseling office. There is a desire to hire an additional counselor which would require using one of the classrooms in the K–2 building as a counseling center that includes a zen den / decompression space for students.

HEALTH AND WELLNESS

There are not enough restrooms in the K–2 building, and the restrooms are not monitored. All buildings are in need of single-occupant restrooms for students, staff, and visitors. There is no changing station for families. There is no proper health room or nurse's office. There are a variety of outdoor zones for play between the different buildings, making supervision difficult. There is a small covered area where students can wait during pickup and dropoff times, but there is no covered play area. On rainy days, students use the lower gym for recess which can conflict with the P.E. time for the FLC students. When asked where they go to recharge, most staff preferred going outside for a quick walk, staying in their classroom when it is empty, or visiting with a colleague. One staff member preferred the staff room. Staff members indicate there are some good places to take students struggling with Social-Emotional Learning (SEL), but there's a lack of support staff to stay with the student so teachers can continue working in the classroom.

SAFETY AND SECURITY

The school is keycard access only. There is no secure entry vestibule, and classrooms do not have automatic door locks. The communications systems should be upgraded, the PA and fire alarms are not loud enough. There is no emergency generator in the case of a power outage.

TECHNOLOGY

All classes have chrome books, one per student. It would be great to have a STE(A)M space where technology can be permanently out and used when needed, for uses like the "girls who code" club, rather than having to gather up and put them away. Technology upgrades are desired for video and audio recording in the future "Entropy Room" in the main office, as well as an electronic reader board at the main entry.

SUMMARY OF STUDENT SURVEY RESPONSES

Music and P.E. are the most inspiring classes overall, but several students report feeling the most inspired by their own teacher. They chose the library, outside, or comfy seating in a classroom as the place they would sit and read a book or work alone. Most students do not report feeling crowded anywhere in the school, but those that do indicate the crowding occurred during recess and in the hallways. Students report avoiding the restrooms. They like to work in a variety of ways — sitting on the floor, at a table/desk, with music on, or on their bed at home.

When asked,

What other tools they need to be successful?

Students responded in a number of ways.

"More time with my friends and a place to practice before a test"

"Calm music"

"I wish we had Spanish or Japanese class"

"Comfortable chairs"

(several responses)

"Nothing more, this school already provides lots of cool and great stuff, thank you."

FUNCTIONAL SOLUTIONS FOR FURTHER STUDY

A number of programs and activities are not supported by the current school facility. Below is a list of recommendations for facility modifications that are based on space and program needs gathered through interviews with the principal and teachers. Each solution requires further feasibility analysis including master planning, cost estimating, and coordination with middle and high school programs.

- Add a secure vestibule and remodel the administrative office to increase safety and security.
- Increase safety at the K–2 building so that students exiting the north doors cannot reach the street.
- Increase opportunities for staff collaboration between the multiple buildings. Remodel the staff room and add a staff room at the K–2 building.
- Build a new covered play area that is for recess on rainy days.
- Develop a STE(A)M identity and increase hands-on learning. Repurpose the library to support a makerspace and large project area.
- Increase parity between teachers with different-sized rooms.
- Replace furniture with flexible and mobile options.
- Remodel for universal accessibility, especially at the front of the school.
- Design nurse and health room facilities with an accessible restroom.
- Remodel or add a formal presentation and performance space. Growing a culture of pride and sharing the amazing work that is created.
- Create gallery spaces for students throughout the school.
- Remodel classrooms to include “calming corners” where students can de-escalate away from the class but still be within sight of teachers.
- Provide a student counseling center.
- Create additional meeting spaces for teachers and staff to collaborate and hold confidential meetings.
- Increase visibility from classrooms to hallways.
- Upgrade the workroom.
- Develop more student-owned spaces.
- Improve single-occupant restrooms for community and student needs.
- Provide new bleachers in the gym.

EDUCATIONAL ADEQUACY SUMMARY OF FINDINGS

GERVAIS MIDDLE SCHOOL

EDUCATIONAL PROGRAM SUPPORT

Most teachers use a project-based learning model, but are greatly hindered by the undersized classrooms (less than 650 sq. ft.) There is no formal lab at the middle school, therefore science is taught in a general education classroom. Students travel to the high school for all electives such as art and CTE. Eighth grade classrooms are in a separate building. Students requested access to more elective classes, especially cooking and art. Students generally feel the school is preparing them well for their future and they have all the tools they need to be successful.

CHARACTERISTICS OF TEACHING SPACES, EQUIPMENT, AND STORAGE

The biggest challenge in the middle school is the classroom size. The building itself is only a few years old, and room sizes are uniform. Teachers have moved the mobile storage units out of the rooms to make space for student seating.

ENVIRONMENTAL CHARACTERISTICS

The HVAC system works fine, and there is adequate daylight in each room. There are no major concerns regarding acoustics or noise transmission. This results in damaged textbooks and materials in inclement weather, along with wet shoes and slippery conditions for students going to the activity center.

RELATIONSHIP OF EDUCATIONAL SPACES

There is one central hallway in the school that is lined with lockers. There are no windows from the classrooms into the hallways, so if students need to go somewhere to finish a test or do solitary work they are sent to another classroom or student services rooms.

SUPPORT SPACE FUNCTIONALITY

There is no health room or nurse's office. The hallway is narrow and crowded during passing time. Students rarely use the lockers. The library is small and served by the same librarian that is at the high school. Students also have access to the high school library. Sports facilities are shared with the high school. There is an "Activity Center" that is used for P.E. which is also rented out to various community groups. Some students report avoiding the locker rooms. On rainy days, the floor becomes very slippery. There is currently not enough seating in the activity center for all-school gatherings. Students report feeling crowded in classrooms, the hallway, and the high school cafeteria that is used for lunch.

WELCOMING AND INCLUSIVE

The staff are very collaborative and inclusive. There is no dedicated staff room or kitchenette, however. All-staff meetings are held in a classroom, and teachers do any prep work or collaboration in their classrooms. The staff requests the main entry of the school be more welcoming and formal.

HEALTH AND WELLNESS

There is a need for more single-occupant restrooms for students and teachers. For students struggling socially, the counseling center and "behavior support room" is available but the room dividers do not provide acoustic privacy for the offices. Additionally, the counseling center is located in the main building and not easily accessed by eighth grade. If a private meeting needs to take place, the principal's office is used. Teachers advocated heavily in the surveys to provide more places for students to gather and socialize. There is no common gathering space at the middle school. Students report not having places to go as individuals or gather in groups. Teachers report going outside or visiting with a colleague when they need to recharge. When asked if students know how to find them, teachers report feeling torn by a responsibility to supervise the activities center, rending them unavailable during breaks to spend time with kids who are asking for help. Students request places they can go to relax on their own, with calm music.

SAFETY AND SECURITY

The school is keycard access only and visitors are buzzed in, but there is no secure entry vestibule. The security cameras work well, but there is a desire to include audio recording. The communication systems work well and the site is generally secure.

TECHNOLOGY

There is adequate technology in the classrooms and for teachers. Science courses would benefit from more technology.

FUNCTIONAL SOLUTIONS FOR FURTHER STUDY

A number of programs and activities are not supported by the current school facility. Below is a list of recommendations for facility modifications that are based on space and program needs gathered through interviews with the principal and teachers. Each solution requires further feasibility analysis including master planning, cost estimating, and coordination with middle and high school programs.

- Upgrade science labs, and create new spaces for electives.
- Add a dining commons that is a gathering, presentation, and social space.
- Remodel to make existing classrooms larger with added storage.
- Provide a staff room for professional development and collaboration.
- Improve counseling services — places students can decompress with a counselor.
- Provide a student-owned chill space for "down time."
- Create outdoor learning and gathering spaces for students.
- Remodel main entry and admin area to create a welcoming school, secure vestibule, and health room.
- Upgrade furniture to more flexible options.
- Add more single-occupant restrooms with greater privacy, and add restrooms and drinking fountains closer to the eighth grade building.
- Add display areas and places to show school pride and culture.
- Create a private office and storage for all teachers within their classroom.
- Reduce crowding in the hallway by moving or re-arranging lockers.
- Solve the slippery gym floor issue.
- Create accessible bleachers.
- Connect the eighth grade building, create a "Middle School Community."
- Remodel locker rooms to increase safety.

EDUCATIONAL ADEQUACY SUMMARY OF FINDINGS

GERVAIS HIGH SCHOOL

EDUCATIONAL PROGRAM SUPPORT

There are currently four CTE programs: Construction, Agricultural Sciences, Health Sciences, and Graphic Arts. These programs are all growing, there is great interest in expanding STE(A)M and CTE opportunities at the high school, with many students reporting a desire to have additional career pathways. Science labs have outdated equipment and non-functional ventilation systems for fume hoods and secure chemical storage. The CTE shops are adequately sized, but have inadequate electrical service. There is currently no music program at the high school, although there are theater classes. The high school provides the FLC services for grades six through 12.

CHARACTERISTICS OF TEACHING SPACES, EQUIPMENT, AND STORAGE

Classrooms are generally adequate in size. The cafeteria is very small for the number of students, 70% to 80% of whom receive school lunch. There is one lunch period and most students eat elsewhere in the building. There are a few seating areas in hallways for students to gather, but students would greatly benefit from a larger cafeteria and additional seating options in the school. Furniture is generally dated and inflexible.

ENVIRONMENTAL CHARACTERISTICS

There are photovoltaic panels on the roof of the middle school, with a dashboard at the high school front office tracking energy their output. There is a new AC system in the school, but the windows are inefficient and southern-facing classrooms can get really hot in the afternoon. The lighting was recently replaced. Teachers report a need for exterminators in the “south hall."

RELATIONSHIP OF EDUCATIONAL SPACES

There are no breakout spaces outside of classrooms, and the lack of interior classroom windows means they cannot extend the learning environment into the hallways. If students need to finish a test or work on something, they go to the library. Room 21 does not have an interior door to the school, students must travel outside to access it.

SUPPORT SPACE FUNCTIONALITY

The library is used often by students and would benefit from more student-friendly lighting and furniture. The computer lab is not necessary since all classes are equipped with chrome books for each student. Specialists from the Educational Service District (ESD) do not have office space, and student services is not centrally located. There is one counselor who does everything. There is a need to have a college/career center in the school with a coordinator to help students navigate their future options. P.E. and sports facilities are generally adequate with the exception of the grandstand which is in disrepair. CTE shops are located in a separate building with a barn and greenhouse near the shop building. Although there have been in the past, there are currently no learning or community gardens on site. Classrooms are used for teacher training, collaboration, and prep. Students report feeling crowded in the hallways and cafeteria. The cafeteria is undersized for the current school population. Students must find other areas of the school

WELCOMING AND INCLUSIVE

Students gather in the hallways, library, and courtyard. The courtyard is a popular place and would benefit from an upgrade with more outdoor furniture. Public access to the fields is through the current CTE shop and maintenance building area. Interviewees indicated this is not the most formal or welcoming entry to the school, especially for competitive sporting events. Many students list teachers' classrooms as the places they go when they have free time. Students and teachers build strong relationships at this school. The library and hallways are also popular places where students like to gather or be alone.

HEALTH AND WELLNESS

There is a desire for better mental health and decompression spaces for general population students. Currently students can get a "pink pass" to enable them to leave the classroom and visit the library or counseling offices for support, but these spaces aren't ideal. Many students report getting school lunch (mixed reviews regarding the quality of food, some say very good, others say it is not) and having plenty of time to eat and relax before the next class. Staff report using the newly created "relaxation room" as a place to recharge. Staff also report a need for more private spaces near classrooms to have confidential conversations with students away from the group. Hallways feel too exposed to have a conversation about SEL. The school is using the RULER program for SEL.

SAFETY AND SECURITY

Other than the CTE shops, the school is completely enclosed. The school has keycard access and a functional communications system. There are functional cameras, additional cameras at all doors would be beneficial. There is a side door with a buzzer for middle school students to use when they come to the high school for lunch.

TECHNOLOGY

Technology is functional and working. The computer lab in the library is no longer needed.

FUNCTIONAL SOLUTIONS FOR FURTHER STUDY

A number of programs and activities are not supported by the current school facility. Below is a list of recommendations for facility modifications that are based on space and program needs gathered through interviews with the principal and teachers. Each solution requires further feasibility analysis including master planning, cost estimating, and coordination with middle and high school programs.

- Add more CTE elective spaces, supplement what will be offered by the Willamette Career Academy.
- Add music and performing arts spaces.
- Provide spaces for student break-out small group project work.
- Add a flexible multipurpose room for projects of all sizes and types.
- Add a performance space or auditorium for speech, drama, and music performance.
- Provide a place for homeless youth to access the things they need independently.
- Add a break room for all staff.
- Provide flexible, comfortable furniture.
- Provide more student-owned spaces, decompression spaces.
- Update library to have more collaborative spaces.
- Add places to exhibit student work and highlight our culture and history.
- Create a new student health and counseling center.
- Upgrade courtyard with seating, ground cover, shade trees.
- Add a nurse's office to the admin area.
- Re-think vehicular access and circulation so that the community entrance to the school and sports fields is welcoming.
- Replace grandstand including press box, concessions, and restrooms.
- Create ADA access to the mezzanine levels (gym, fitness.)
- Upgrade science lab, including ventilation and chemical storage.
- Remodel restroom partitions to increase safety and privacy.
- Upgrade ventilation for woodshop/welding shop, photography dark room.
- Add to the existing cafeteria and/or additional spaces throughout the school for student dining

POPULATION PROJECTIONS AND CAPACITY ANALYSIS

POPULATION PROJECTIONS

In November 2020, IBI Group's population and demographics research department provided the District with 5, 10, and 15-year enrollment projections. The source of age-based population projections came from the Coordinated Population Forecast for Marion County 2017–2067. This forecast was prepared by Portland State University's Population Research Center in 2017. The study included historic data for school years 2009 through 2019 obtained from the Oregon Department of Education and forecast data for 2025,2030, and 2035. This 15-year analysis was broken into grade level elementary, middle, and high school enrollment.

The study also took into account Marion County and sub-area forecast growth as well has historic age-group projections from the US Census Bureau's American Community Survey. The table below summarizes the results of the study. The full population projection report can be found in the appendix.

Population Forecasts by Age Group / Year	2017	2020	2025	2030	2035	2040	2045	2050	2055	2060	2065	2067
00-04	24,691	25,352	26,197	26,969	27,816	28,816	29,909	31,003	32,054	33,109	34,228	34,704
05-09	23,891	24,434	25,568	26,399	27,186	28,059	29,082	30,197	31,303	32,373	33,452	33,907
10-14	23,384	23,915	24,862	25,996	26,850	27,669	28,573	29,627	30,764	31,900	33,005	33,447
15-19	24,007	24,271	25,231	26,211	27,415	28,337	29,217	30,184	31,300	32,512	33,727	34,197
20-24	22,550	23,062	23,521	24,435	25,395	26,584	27,495	28,365	29,308	30,405	31,599	32,075
25-29	22,780	23,029	23,943	24,404	25,363	26,382	27,635	28,597	29,506	30,500	31,658	32,158
30-34	22,140	22,839	23,290	24,200	24,675	25,666	26,714	27,998	28,977	29,911	30,935	31,408
35-39	21,200	21,626	22,818	23,254	24,175	24,671	25,679	26,747	28,038	29,033	29,987	30,402
40-44	20,767	21,541	22,308	23,530	23,994	24,970	25,503	26,563	27,678	29,032	30,083	30,485
45-49	20,489	21,097	22,468	23,267	24,568	25,082	26,128	26,708	27,833	29,026	30,473	30,922
50-54	20,268	20,250	21,293	22,655	23,469	24,800	25,324	26,384	26,962	28,097	29,307	29,886
55-59	20,094	20,175	20,174	21,201	22,565	23,395	24,739	25,272	26,331	26,916	28,062	28,546
60-64	19,054	19,778	19,943	19,939	20,973	22,349	23,197	24,553	25,093	26,164	26,768	27,228
65-69	16,306	17,739	18,919	19,078	19,111	20,154	21,518	22,379	23,729	24,287	25,366	25,616
70-74	13,300	15,253	17,442	18,438	18,448	18,344	19,200	20,338	20,978	22,064	22,398	22,716
75-79	9,613	11,445	14,313	16,258	17,078	16,985	16,789	17,466	18,377	18,834	19,682	19,748
80-84	6,698	7,546	10,033	12,448	14,041	14,641	14,451	14,175	14,626	15,261	15,509	15,731
85+	6,535	6,771	7,778	9,740	12,230	14,603	16,387	17,419	17,981	18,701	19,632	19,965
Total	**337,773**	**350,125**	**370,099**	**388,420**	**405,352**	**421,508**	**437,540**	**453,978**	**470,837**	**488,126**	**505,872**	**513,142**

Population Forecasts prepared by: Population Research Center, Portland State University, June 30, 2017.

Figure 23. Marion County's Sub-Areas—Total Population

Area / Year	2017	2020	2025	2030	2035	2040	2045	2050	2055	2060	2065	2067
Marion County	337,773	350,125	370,099	388,420	405,352	421,508	437,540	453,978	470,837	488,126	505,872	513,142
Aumsville UGB	4,209	4,750	5,253	5,731	6,141	6,501	6,768	7,001	7,197	7,390	7,582	7,658
Aurora UGB	1,028	1,080	1,168	1,248	1,321	1,387	1,445	1,496	1,538	1,580	1,613	1,622
Detroit UGB	216	218	222	225	227	229	231	232	234	235	237	237
Donald UGB	994	1,011	1,172	1,355	1,555	1,705	1,820	1,922	2,007	2,072	2,128	2,150
Gates UGB (Marion)	435	441	449	456	462	467	472	476	481	484	488	489
Gervais UGB	2,657	2,781	2,996	3,175	3,346	3,494	3,618	3,716	3,789	3,834	3,853	3,850
Hubbard UGB	3,375	3,527	3,711	3,893	4,074	4,256	4,440	4,626	4,791	4,958	5,127	5,195
Idanha UGB (Marion)	80	81	83	84	85	87	88	90	92	93	95	96
Jefferson UGB	3,318	3,446	3,664	3,866	4,071	4,279	4,470	4,641	4,814	4,988	5,165	5,237
Lyons UGB (Marion)	53	53	53	53	53	53	53	53	53	53	53	53
Mill City UGB (Marion)	309	313	319	326	333	339	345	351	357	363	369	371
Mount Angel UGB	3,551	3,570	3,665	3,757	3,847	3,935	4,023	4,110	4,196	4,282	4,369	4,403
Salem/Keizer UGB (Marion)	218,689	226,495	239,794	253,349	266,626	279,724	292,908	306,297	319,963	333,816	347,730	353,218
Scotts Mills UGB	384	402	427	448	465	480	494	507	521	535	548	554
Silverton UGB	10,214	10,701	11,545	12,341	13,076	13,759	14,406	15,032	15,631	16,193	16,704	16,889
St. Paul UGB	401	409	420	431	441	452	463	475	487	499	512	517
Stayton UGB	8,138	8,330	8,696	9,065	9,432	9,798	10,174	10,552	10,936	11,318	11,695	11,841
Sublimity UGB	2,857	2,930	3,060	3,193	3,316	3,430	3,534	3,628	3,714	3,789	3,854	3,876
Turner UGB	2,066	2,355	2,925	3,214	3,439	3,655	3,859	4,050	4,225	4,382	4,541	4,605
Woodburn UGB	26,211	27,399	29,608	31,923	34,187	36,322	38,330	40,246	42,077	43,839	45,574	46,262
Outside UGB Area	48,587	49,833	50,870	50,289	48,857	47,158	45,599	44,476	43,737	43,422	43,638	44,020

Population Forecasts prepared by: Population Research Center, Portland State University, June 30, 2017.

WHAT IS SCHOOL CAPACITY?

The ability of a school building and site to meet needs of the student population.

CAPACITY ANALYSIS

This analysis provides a capacity number that is accurate to the programs and grade levels currently being taught in each building at the time of the assessment. However, it is also important to consider future programs, technology, and priorities at a particular campus and the impact each will have on classroom inventory and student teaching stations. As the educational strategic goals and pedagogies change, the room functions, and therefore capacity of the building, will also change.

WHAT IS TEACHING STATION CAPACITY?

Teaching station capacity is derived by counting the total number of teaching stations, applying a utilization rate (percentage of time the room is empty due to teacher planning periods at middle and high schools), and multiplying the number of students in the room.

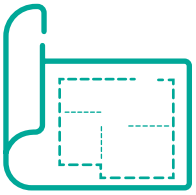

WHAT IS BUILDING OVERALL SQUARE FOOTAGE CAPACITY?

Building Overall Square Footage Capacity is derived by taking the gross square footage of the entire building and dividing it by a Sq. ft./Student value. Building Capacity indicates how adequate the overall building size is to serve the number of students. If the building capacity value is less than teaching station capacity, that is typically an indication that the non-classroom areas like cafeterias, hallways, libraries, etc., of the school may be undersized. The sq. ft./student values used in this analysis are taken from proposed recommendations by the Oregon Department of Education: 125 sq. ft./student for elementary schools, 151 sq. ft./student for middle schools, and 180 sq. ft. student for high schools.

METHODOLOGY

In September 2020, IBI Group conducted site visits and follow-up correspondence to collect information on student enrollment, class schedules, and classroom uses. Each school principal was engaged to determine the manner in which every classroom-sized space within the facility is currently utilized. School capacity is calculated based on the following District standard class size goals:

- 25 students per general education teaching station in grades K–12
- 15 students per teaching station in Special Education programs

Utilization of general education classrooms for the elementary school is 100%. Teachers have sole ownership of their classrooms (no teachers share a room) and each student is assigned to a teacher. Therefore, any additional teaching stations in the school (gymnasium, library, music/arts, computer labs, etc.) serve only as pullout or supplemental programs to the general education teachers and their respective students.

Utilization of teaching stations for the middle and high school are 83%. Teachers have sole ownership of their classrooms and teachers conduct prep time in their classroom when it is void of students, leaving the classroom empty one out of seven periods of the day. Other spaces may be utilized fewer than six periods out of seven due to teacher availability or subject matter, but are not reflected in the following capacity studies.

SUMMARY OF CAPACITY FINDINGS

Given the current programs, enrollment, and projected growth, there is a need to add capacity to the middle and high schools. Although the elementary school appears to be over capacity by the year 2035 by about 68 students, the elementary school has a generous amount of square-footage that could be more efficiently utilized in order to make up the additional teaching stations.

The middle and high school are both over capacity as enrollment grows the next 15 years, and there is no underutilized space at either facility. The middle school is also over capacity at an overall building square-footage level which is an indication that the support spaces are inadequate to serve the population. This is likely due to the fact the middle school has no cafeteria, kitchen, or electives. Students must travel to the high school for these facilities. Additionally, the classrooms at the middle school are grossly undersized at less than 650sf each. As a comparison, the size of the average core subject (not CTE) classrooms at the high school is 941sf. Both teachers and students stressed the need for larger rooms at the middle school level.

Additional needs and programs that will affect capacity are indicated in the previous Educational Adequacy Summary of Findings section.

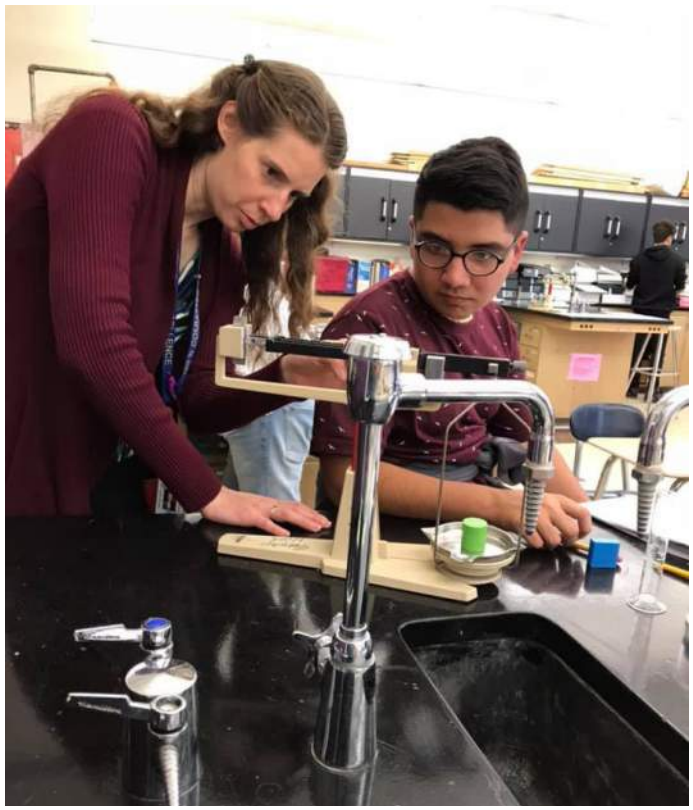

	Enrollment 2020	Enrollment Projections 2025	Enrollment Projections 2035
GERVAIS ELEMENTARY SCHOOL	479	502	533
Teaching Station Capacity Main Building and Out Buildings	-14	-37	-68
Building Overall Sq Footage Capacity 97.295sf/125sf per student	299	276	245
GERVAIS MIDDLE SCHOOL	260	257	277
Teaching Station Capacity Main Building and Out Buildings	-27	-24	-44
Building Overall Sq Footage Capacity 30,424sf/151sf per student	59	56	76
GERVAIS HIGH SCHOOL	393	408	422
Teaching Station Capacity Main Building and Out Buildings	-1	-16	-30
Building Overall Sq Footage Capacity 78,790sf/180sf per student	44	29	15

CAPACITY ANALYSIS

GERVAIS ELEMENTARY SCHOOL

Number of Teaching Stations	Teaching station Capacity Main Building and Out Buildings	Building Capacity 97.295 sq. ft./125 sq. ft. per student	Current Enrollment
19	465	778	412

TEACHING STATIONS	Quantity	Class Size Goals	Capacity at 100% Use	Current Utilization (2)	Adjusted Capacity	Location
General Classroom (1)	18	25	450	1.00	450	K–2 in outbuilding, 3–5 in main building, two grade 5 in portable
SPED (Functional Learning Center)	1	15	15	1.00	15	
TOTAL	**19**		**465**		**465**	

SPECIAL USE: SPACES FOR SUPPORT OR PULLOUT PROGRAMS	Quantity	Notes
Pull-out services (reading and math support, counseling, resource, ELD) (3)	4	
P.E. Main Gym, Library, Music	3	
TOTAL	**7**	

1. For general instruction not requiring a specialized room.
2. A prep factor has been calculated in order to take into account that classrooms will not be occupied every period of the day.
3. Self-contained SPED classrooms are counted as teacher stations for capacity purposes (with a lower class size). SPED classrooms for delivering pull-out services (e.g. resource rooms) are not counted as teaching stations for capacity purposes.

CAPACITY ANALYSIS

GERVAIS MIDDLE SCHOOL

Number of Teaching Stations	Teaching station Capacity Main Building and Out Buildings	Building Capacity 30,424 Sq. ft./15 sq. ft. per student	Current Enrollment
11	233	201	245

TEACHING STATIONS	Quantity	Class Size Goals	Capacity at 100% Use	Current Utilization (2)	Adjusted Capacity	Location
General Classroom (1)	10	25	250	0.83	208	Six in main building, four in grade 5 building
SPED (Functional Learning Center)	0		0		0	Middle schoolers go to the Functional Learning Center at the high school
Science Labs	0		0		0	
Music (Band and Choir)	0		0		0	
Art Classrooms	0		0		0	
CTE Labs	0		0		0	
P.E. Gymnasium	1	25	25	1.00	25	Activities Center Outbuilding
TOTAL	**11**		**275**		**233**	

SPECIAL USE: SPACES FOR SUPPORT OR PULLOUT PROGRAMS	Quantity	Notes
ELD/Resource rooms	2	
TOTAL	**2**	

1. For general instruction not requiring a specialized room.
2. A prep factor has been calculated in order to take into account that classrooms will not be occupied every period of the day.

Self-contained SPED classrooms are counted as teacher stations for capacity purposes (with a lower class size). SPED classrooms for delivering pull-out services (e.g. resource rooms) are not counted as teaching stations for capacity purposes.

According to the principal, classroom is used for prep for one period in a seven period schedule

CAPACITY ANALYSIS

GERVAIS HIGH SCHOOL

Number of Teaching Stations	Teaching station Capacity Main Building and Out Buildings	Building Capacity 78,790 Sq. ft./18 sq. ft. per student	Current Enrollment
19	392	437	323

TEACHING STATIONS	Quantity	Class Size Goals	Capacity at 100% Use	Current Utilization (2)	Adjusted Capacity	Location
General Classroom (1)	11	25	275	0.83	299	Main building
SPED (Functional Learning Center)	1	15	15	0.83	12	Main building
Science Labs	2	25	50	0.83	42	Main building
Music and Performing Arts	0				0	
Art Classrooms	1	25	25	0.83	21	Main building
CTE Labs (Ag, Construction Tech, Health Science)	3	25	75	0.83	62	Classroom in main, Lab in outbuilding
P.E. Gymnasium/Wrestling	1	25	25	1.00	25	Mezzaning-level wrestling not included, is not accessible.
TOTAL	**19**		**465**		**392**	

SPECIAL USE: SPACES FOR SUPPORT OR PULLOUT PROGRAMS	Quantity	Notes
Academic Assistance Resource Room	1	
TOTAL	**1**	

1. For general instruction not requiring a specialized room.
2. A prep factor has been calculated in order to take into account that classrooms will not be occupied every period of the day.

Self-contained SPED classrooms are counted as teacher stations for capacity purposes (with a lower class size). SPED classrooms for delivering pull-out services (e.g. resource rooms) are not counted as teaching stations for capacity purposes.

According to the principal, classroom is used for prep for one period in a seven period schedule

02

PLANNING FOR THE FUTURE

THIS PAGE IS INTENTIONALLY LEFT BLANK
FOR PRINTING PURPOSES

02

PLANNING FOR THE FUTURE

THE PLANNING COMMITTEE

COMMITTEE PROCESS

In the Winter of 2020/21, Gervais School District's Superintendent, Dandy Stevens, invited the community to take part in a planning process that would be funded through a state grant that had been awarded to the District earlier that year. The end goal being a 10–year plan that assists the District in facility decisions, including determining the needs for capital improvements.

The 19-member Long-Range Facility Planning (LRFP) Committee conducted three two–hour meetings over a virtual meeting platform: December 15, January 19, and February 14. The LRFP Committee was comprised of school teachers and staff, parents, administrators, community members, and representatives from the local jurisdiction and school board.

COMMITTEE'S CHARGE

After being provided with the facility data, the LRFP Committee was then given a charge. In developing a plan for the future of the Gervais school community, the Committee must:

- Represent all stakeholder groups
- Balance individual vision with what is best for the entire community
- Help to communicate the LRFP process to the community
- Contribute to the vision and goals of the LRFP

In the first meeting, the LRFP Committee was provided with the facility data summarized in the first half of this LRFP report:

1. Facility Condition Assessment Findings
2. Seismic Evaluation Findings
3. Building and Site Utilization
4. Enrollment Projections and Capacity Analysis
5. Educational Adequacy Findings

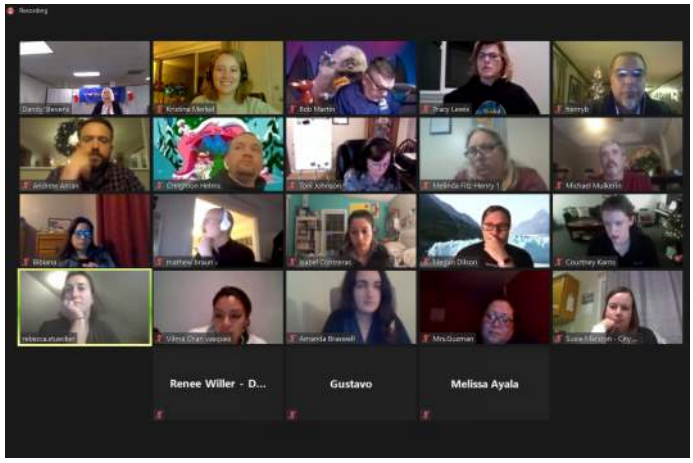

Committee Charge meeting.

VISION AND GUIDING PRINCIPLES

THE VISIONING PROCESS

The members of the LRFP Committee followed a collaborative, value-based process to build a vision for Gervais schools. At the first LRFP Committee meeting, each member was asked to voice their greatest aspirations and fears for the future of District schools, and to define the measure of success for a long-range plan. Members then used an online platform to select the key value statements and propose new ideas. At the next meeting, members discussed the results, edited each statement, and placed them in order of priority. The Guiding Principles that resulted provide a framework and measure for all future decisions; they are the "North Star" from which all facility planning decisions will navigate.

What is your greatest ASPIRATION for Gervais Schools?

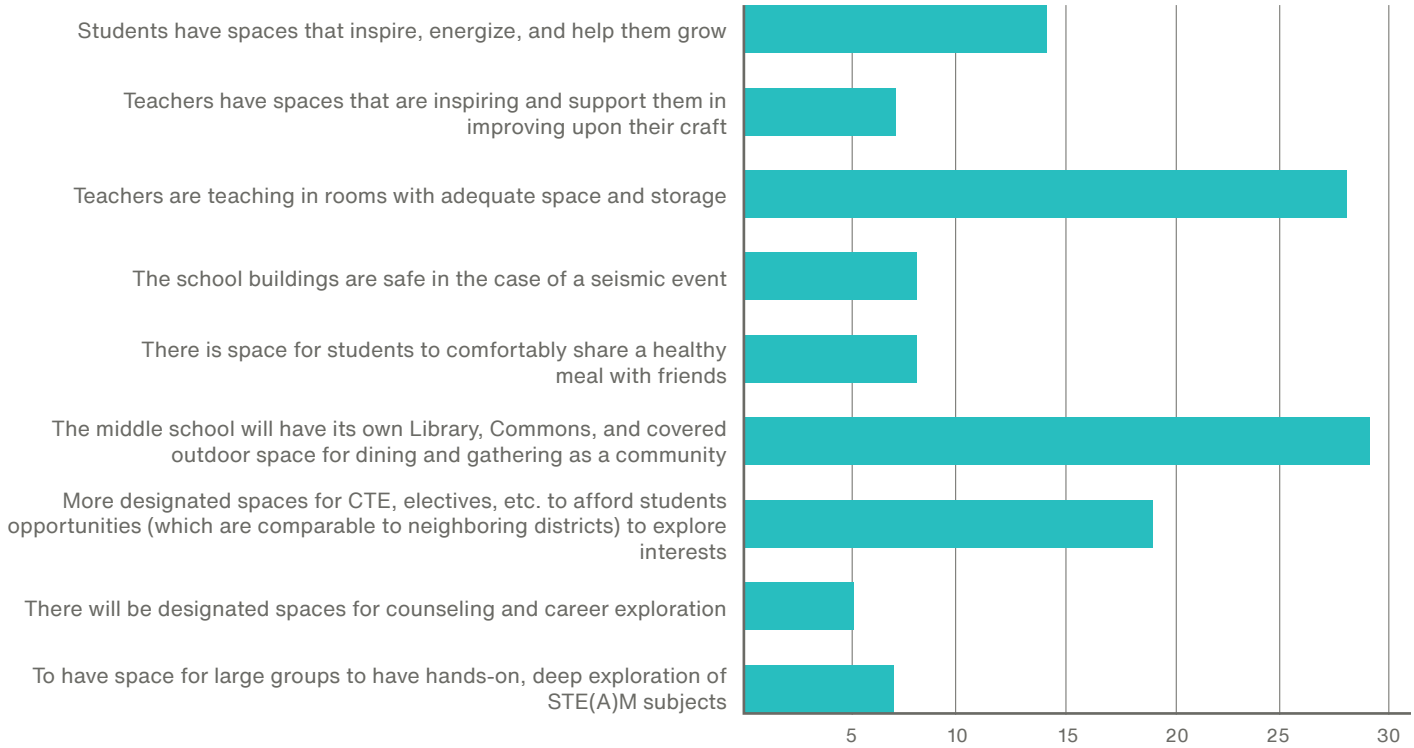

What is your greatest ASPIRATION for Gervais Schools?

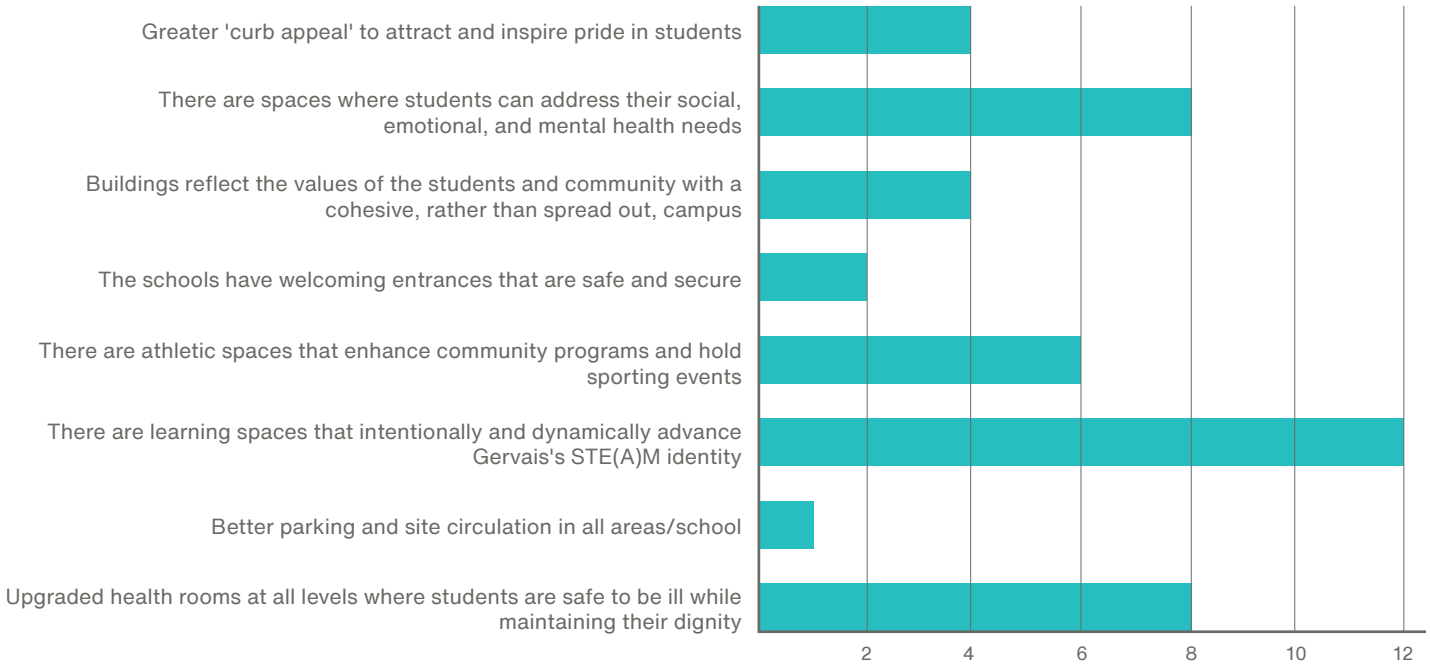

How will we know we've been SUCCESSFUL?

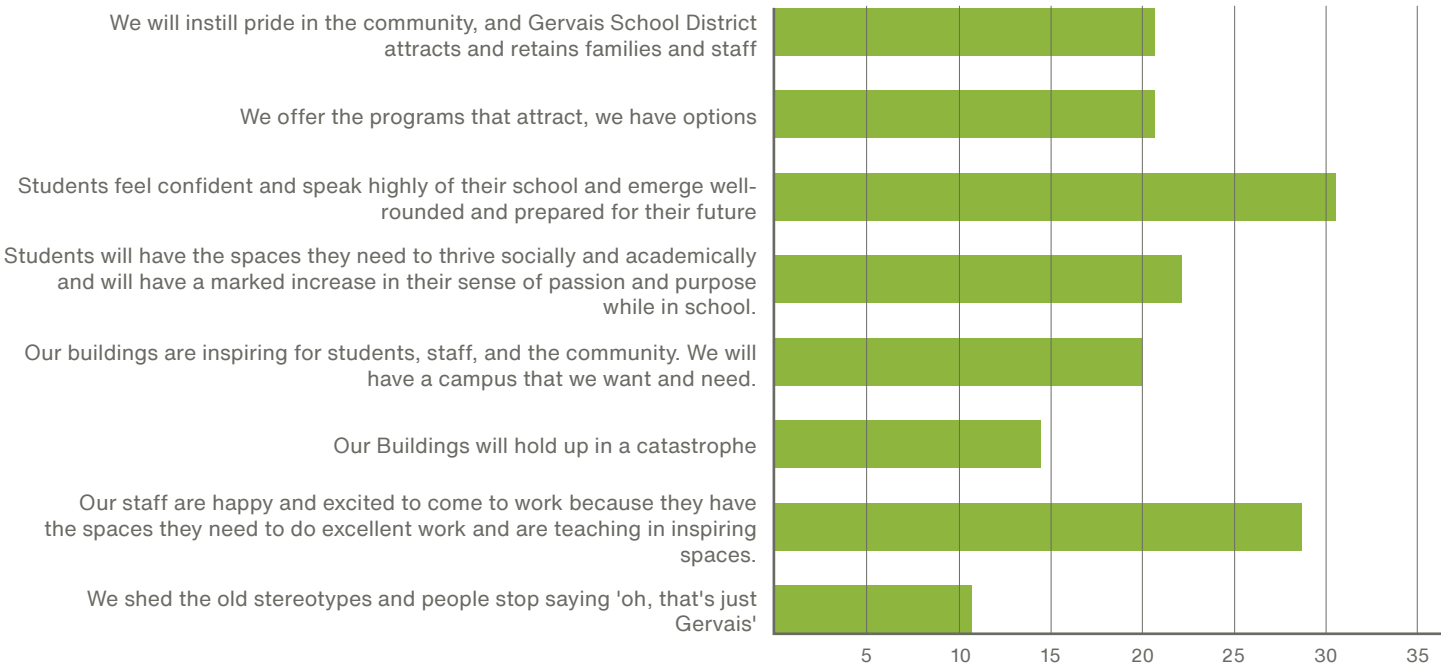

What is your greatest FEAR for Gervais Schools?

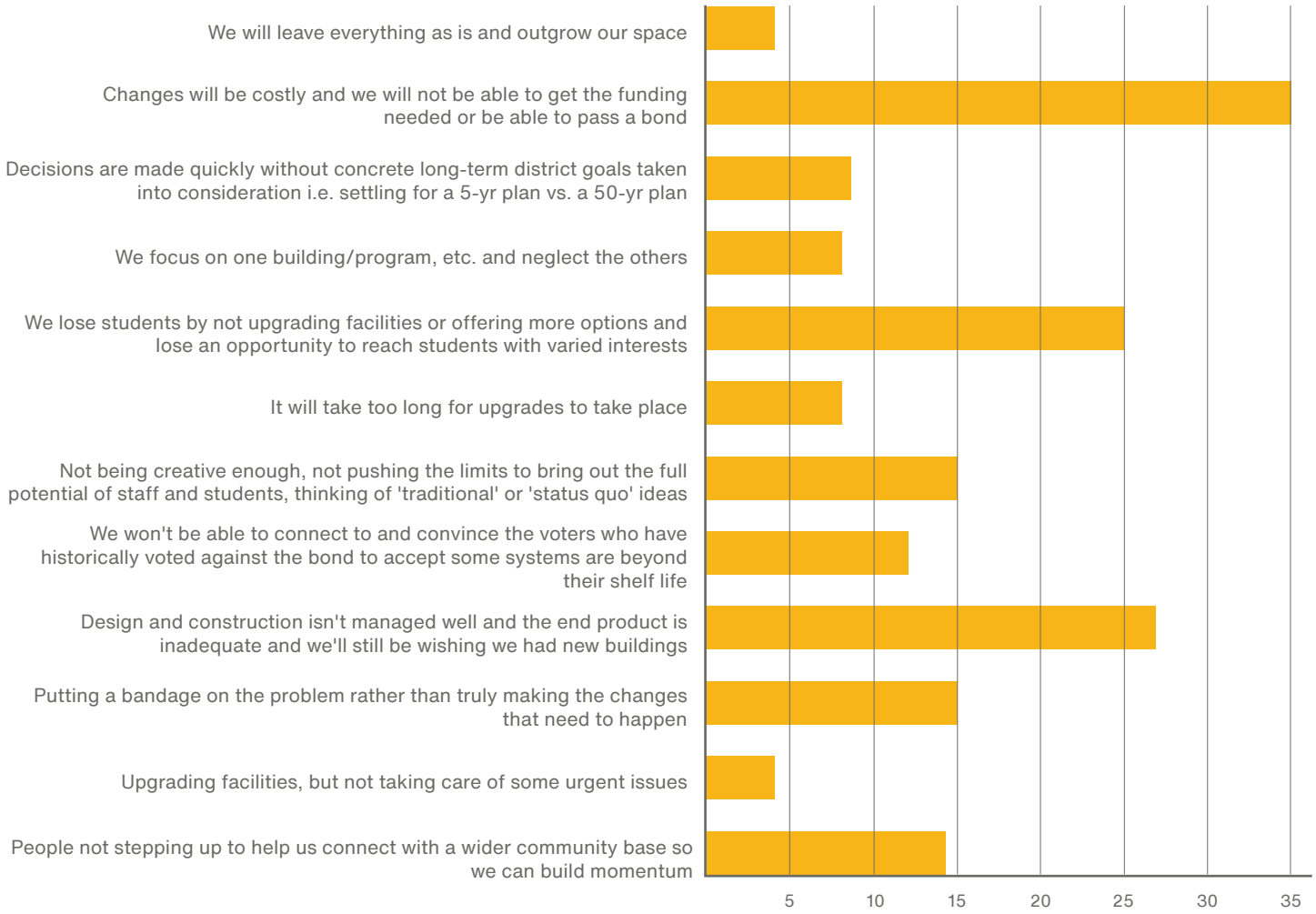

Guiding Principles

1. **Our schools will be safe and secure for all our students and teachers.**
2. **All our students will have the resources they need to reach their full potential. Our students will be prepared for their future and will thrive.**
3. **Our schools will draw people in. Students come back to Amity to send their kids to our schools. Our schools grow the community.**
4. **Our school buildings will be safe in a natural disaster.**
5. **Our school buildings will provide space for future growth and will have the quality our students and community deserve.**

DEFINING HOW WE ACHIEVE OUR VISION

TOPIC-FOCUSED PRESENTATIONS

Gladstone High School, CTE classroom

How can facilities support student social and emotional growth? How can we incorporate STE(A)M, CTE, and flexible spaces to support programs that prepare students for their future? Due to the stated values around STE(A)M, CTE, and student well-being, IBI Group provided two topic-focused presentations:

- Preparing students for the future
  - » STE(A)M
  - » CTE
  - » Project-Based Learning
- Facilities that support Social and Emotional Learning

These brief presentations provided information into the research and current trends in K–12 education in the region, state, and beyond.

STE(A)M, CTE, and Project-Based Learning

There is a great deal of momentum at the federal, state, and district level to increase access and exposure to careers for high school students. Some CTE spaces are expensive to build and can be outfitted with equipment that quickly becomes obsolete. Many of today's students will find themselves in a career that does not yet exist. It is important districts think carefully about the best way to prepare students for their future while being fiscally responsible to their community. This short presentation focused on understanding the student's needs through surveys of neighboring districts and conversations with Gervais' high schoolers;

- What careers do they plan to pursue after graduation?
- What careers do they want to have more exposure to in order to make those decisions?

The presentation also included images and examples of spaces in schools that are designed to support inquiry-based and hands-on learning. These included images of formal, informal, and inspirational schools. Lastly, there was a discussion about career pathways centers and the places students can go in a school to gain access and exposure to careers during and beyond their years in high school.

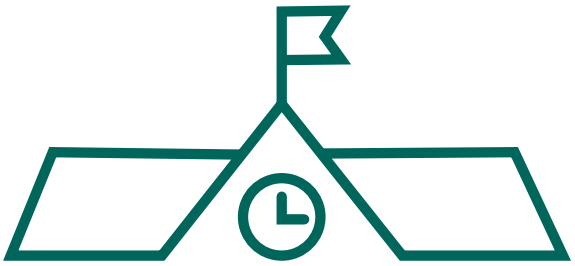

The average student in the US spends 180 days in a school building every year from age five to 18

National Center for Educational Statistics

Supporting Social and Emotional Learning

There are many ways our environments contribute to our well-being: the daylight and views we have, how comfortable and varied our seating is, how quiet or noisy the room is, and even the colors and materials we're surrounded by all have measurable impacts on our physical and mental welfare. In the case of schools, the environment is even more critical. School facilities can support Social and Emotional Learning by:

1. Providing differentiated environments that support a variety of learning styles and teaching methods and allow for individualization.
2. Providing a welcoming and healthy environment. Places to cool down, regulate, and reason.
3. Distributing student services and places for students to access academic and SEL interventions throughout the school.
4. Connecting students to counseling/support services within and outside the school walls through places like wellness centers.

This presentation included several images of schools that were designed to achieve these four criteria.

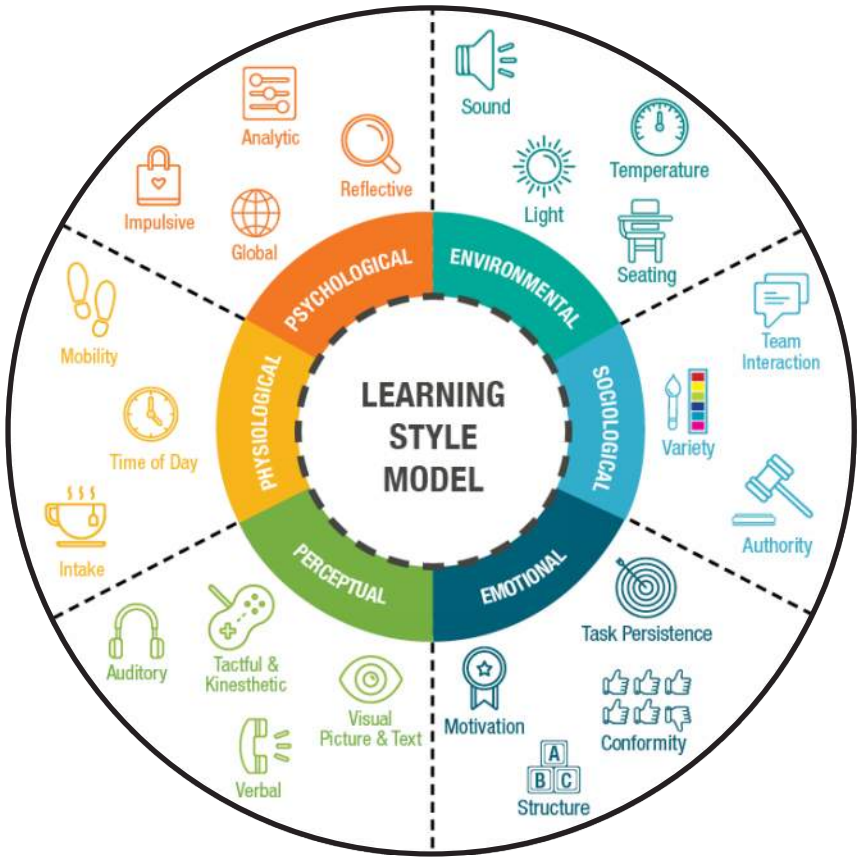

Image adapted from Dunn and Dunn BE learning education models

Idea-Generating Workshop

Once the values and Guiding Principles for LRFP were established, the committee was asked the ever-present question: How? After the two presentations previously mentioned, the committee took part in a workshop through small-group breakout sessions in the virtual meeting platform to answer this question. Each group felt they needed more time to consider their answers so an online survey was issued after the meeting to give committee members a chance to finish recording their ideas.

These questions were posed to the small groups during the workshop:

1

What types of spaces would we need to fulfill our identity as a STE(A)M and CTE-focused district? At all grade levels?

2

What changes could be made to increase our sense of pride? In buildings and programs?

3

What kind of spaces are needed to support the level of excellent teaching and learning that our community deserves? At each school building?

4

What kind of spaces are needed to best support a student's social emotional growth that aren't currently present?

5

What are some ways we could communicate these needs to our voters?

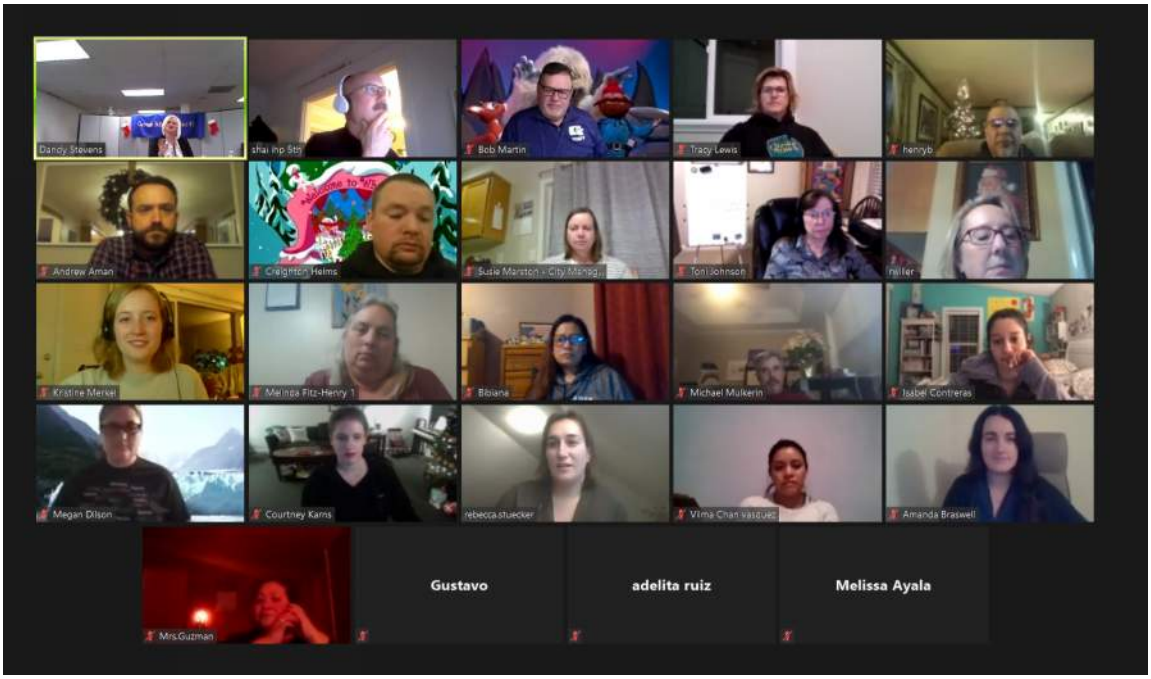

Project prioritization

The LRFP Committee underwent an involved process in order to determine the projects that would best serve the community, students, and staff of Gervais School District. The ideas generated by the committee to answer the five questions in the survey and from the previous meeting were added to a running project list. This project list also included proposed upgrades from the Educational Adequacy Assessments, Facility Condition Assessments, and Seismic Evaluations. The compiled project lists for each school were then grouped into four major categories:

- CTE and STE(A)M Educational Program Support
- Building Community and Supporting Students
- Infrastructure, Access, and Safety
- Growth and Capacity Needs

The committee again broke into small groups via the virtual meeting platform and discussed each item before determining whether to label it a high, moderate or low priority. No cost estimates were provided to the committee at this time. The purpose of the exercise was to understand the values of the committee without the financial variable. For instance, if the committee highly values sprinkler system upgrades but the construction cost is prohibitive, the design team can find other methods for increasing fire and life safety measures in the building, knowing it has a high value to the community.

The following pages are a record of project priorities by the committee.

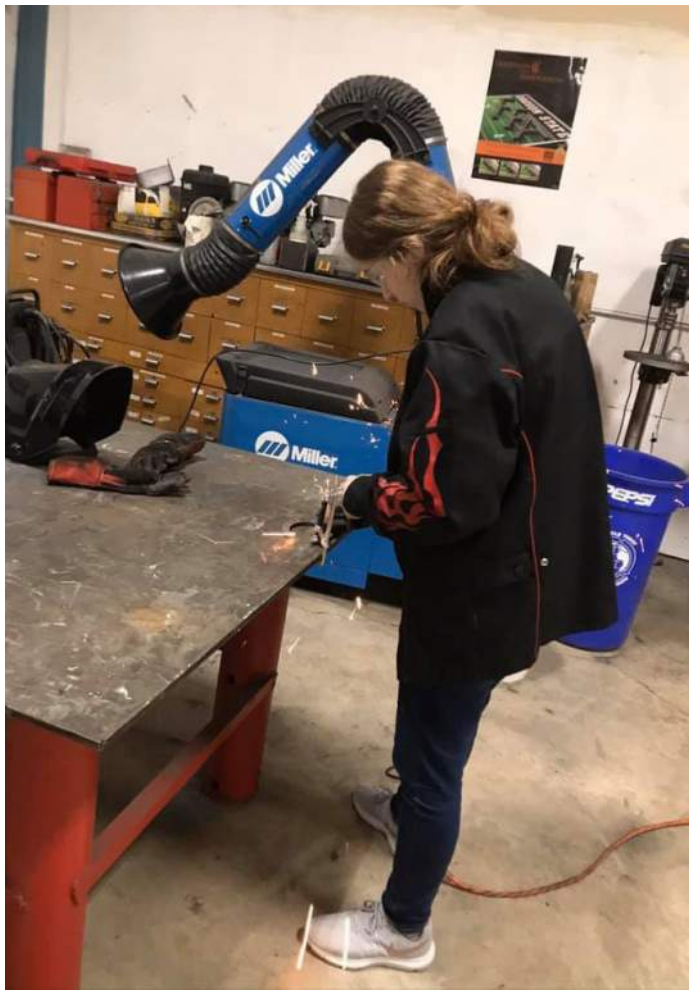

GERVAIS ELEMENTARY SCHOOL

Project Prioritzation Survey Results

The following charts represent the committee's voting results. The committee was broken into three groups, each dot represents the vote of one group. Some groups abstained to vote on certain line items.

CTE AND STEM EDUCATIONAL PROGRAM SUPPORT	Low Priority			Moderate Priority			High Priority			Comments
Remodel the library to become a space for hands-on, project-based learning. It should be the central location to access mobile STE(A)M carts and supplies, and have all the components of a 21st-century learning lab for projects big and small.				●	●				●	
New books for all grades		●	●							
More computers		●				●				Have plenty of chromebooks, but they're limited processing for STE(A)M projects.
Performance and presentation space with stage and risers								●	●	A high quality space to "show off our kids!" and what they create (STE(A)M).

BUILDING COMMUNITY AND SUPPORTING STUDENTS	Low Priority			Moderate Priority			High Priority			Comments
More flexible and comfortable furniture in classrooms and library for individual and group work					●		●		●	
Create gallery spaces for students to show off their work. Some installations should be permanent, others not.		●					●		●	
Spaces like "calming corners" where students can de-escalate away from the classroom but still be within sight of teachers					●		●		●	In the classroom, still included but able to have time to themselves.
Lighting upgrades, paint color in the classrooms. Make it look like a place where students think "this is a place for me"						●	●	●		
Provide a student counseling center					●		●		●	
Add silent work spaces for students		●					●		●	In the classroom, would work. Not a high need if it's a separate space.
Provide a designated large conference room / gathering space for teachers		●							●	Combine with library remodel in item #1 — teacher collaboration and student collaboration.
Upgrade the staff room		●				●				Just received some funds for this.
Add a staff room to the K–2 building					●				●	High priority if we don't pass a bond to create a single k–5.
Add windows to the hallway from the classrooms								●	●	
Larger workroom with multiple copiers		●							●	
More student-owned spaces		●							●	
Improve the acoustics in the classrooms					●	●				A few rooms.
Add a health room and nurse's office with accessible restroom								●	●	
Private office and storage for all teachers within in their classrooms		●				●				
Strengthen community between K–2 and 3–5. Staff and students								●	●	
Improve single-occupant restrooms for community and student needs					●				●	
Increase overall storage								●		

INFRASTRUCTURE, ACCESS, AND SAFETY	Low Priority			Moderate Priority			High Priority			Comments
New bleachers in the gym		●							●	
Upgrade the HVAC system								●	●	
Adequately sized covered play area so students do not need the gym on rainy days								●	●	
New, more secure doors for lockdown								●	●	
Improve the Wi-Fi		●							●	
Improve accessibility: wheelchair access at the front is not welcoming					●				●	
Improve security at entry doors: add a vestibule or automatic door locks					●				●	
Fix the safety issues at the K–2 building: students who bolt can run straight to the street									●	
Seismic upgrades									●	
Roof upgrades — reframe to eliminate the “well” area									●	
Exterior improvements — siding, trim, window replacement in the gym building,									●	
Interior improvements — replace broken/damaged ceilings, flooring, walls										
Upgrade Fire Suppression systems										

GROWTH AND CAPACITY NEEDS	Low Priority			Moderate Priority			High Priority			Comments
Growth and Capacity Needs									●	

GERVAIS MIDDLE SCHOOL

Project Prioritzation Survey Results

The following charts represent the committee's voting results. The committee was broken into three groups, each dot represents the vote of one group. Some groups abstained to vote on certain line items.

CTE AND STEM EDUCATIONAL PROGRAM SUPPORT	Low Priority			Moderate Priority			High Priority			Comments
Remodel, or add new science labs with modern equipment						●		●	●	
Add spaces for electives (CTE, music, culinary, etc.)							●	●	●	
Provide a multipurpose, flexible, hands-on learning and making lab							●	●	●	

BUILDING COMMUNITY AND SUPPORTING STUDENTS	Low Priority			Moderate Priority			High Priority			Comments
Remodel to make existing classrooms larger with added storage							●	●	●	
Provide a staff room for professional development and collaboration					●		●		●	Bigger staff work room, not bug those relaxing.
Improve counseling services — places students can decompress with a counselor			●			●		●	●	Improve how it looks.
Provide a student-owned chill space for “down time”			●		●	●				
Outdoor learning and gathering spaces for students		●				●				Benches
Remodel main entry and parking to create a welcoming school					●	●			●	Is crowded, special parking; path to gym entry.
Remodel admin area to include health room (with nurse’s station) and restroom					●		●		●	
Flexible furniture that fits the classrooms and is mobile							●	●	●	
More single-occupant restrooms with greater privacy					●		●		●	
More display areas to highlight our students’ work	●				●				●	By 8th grade modulars — waterproof.
Private office and storage for all teachers within their classroom		●					●		●	Only if they’re bigger rooms.
Exterior building refresh		●				●	●			New front entry sign.
A completely new building						●	●	●		
Reduce crowding in the hallway by moving or re-arranging lockers						●	●	●		
Gym — upgrade locker rooms, gender neutral, etc.							●			
More staff restrooms, more than one! Crowded with other activities							●			

INFRASTRUCTURE, ACCESS, AND SAFETY	Low Priority			Moderate Priority			High Priority			Comments
Fix the slippery gym floor							●	●	●	
Accessible bleachers					●		●		●	
Provide restrooms and drinking fountains close to the 8th grade building							●	●	●	
Connect the 8th grade building, create a "Middle School Community"					●		●		●	
Remodel locker rooms to increase safety		●					●		●	
Resurface and restripe parking lot		●				●			●	
Interior improvements — replace damaged flooring in 8th grade building	●				●				●	

GROWTH AND CAPACITY NEEDS	Low Priority			Moderate Priority			High Priority			Comments
Add two classrooms for future enrollment growth							●	●	●	New neighborhood — big houses!
Dining commons (with kitchen) for middle school students — so they do not need to travel to the high school and to provide a place to gather as a community					●		●		●	

GERVAIS HIGH SCHOOL

Project Prioritzation Survey Results

The following charts represent the committee's voting results. The committee was broken into three groups, each dot represents the vote of one group. Some groups abstained to vote on certain line items.

CTE AND STEM EDUCATIONAL PROGRAM SUPPORT	Low Priority			Moderate Priority			High Priority			Comments
Add more CTE elective spaces, supplement what will be offered by the Willamette Career Academy				●	●				●	
Add music and performing arts spaces					●		●	●	●	Have stage + music room not being used that way.
Upgrade science labs				●				●	●	
Provide spaces for student break-out small group project work						●	●			
Add a flexible multipurpose room for projects of all sizes and types		●				●	●			
Add graphics and arts equipment	●				●				●	
New auditorium for speech, drama, and music performance					●		●		●	
Add outdoor classroom		●				●				
New culinary arts lab				●				●	●	
Update the existing CTE rooms	●				●				●	
Add a student store/cafe (that partners with the Business CTE program)					●	●			●	

BUILDING COMMUNITY AND SUPPORTING STUDENTS	Low Priority			Moderate Priority			High Priority			Comments
Add a college/career pathways center with computers for students						●		●	●	
Relocate counseling to be closer to where students gather and not in the admin area.							●	●	●	
Private office and storage for all teachers within their classroom		●				●			●	
Provide a place for homeless youth to access the things they need independently						●		●	●	
Provide more student mental health and wellness support spaces						●	●		●	
Add single occupant restrooms					●		●		●	
Add a break room for all staff	●					●		●		
Flexible, comfortable furniture			●					●	●	
Covered walkway between north and south halls	●				●				●	Middle to high maybe.
Provide more student-owned spaces, decompression spaces						●		●	●	
Update library to have more collaborative spaces					●		●		●	
New paint colors	●		●		●					
Add places to exhibit student work and highlight our culture and history				●	●				●	Lots of cases and boards already.
New health and counseling center for students only					●		●		●	School district health center.
New health and counseling center for students and community to access					●		●		●	
Upgrade courtyard with seating, groundcover, shade trees		●					●		●	Solarium, cover of some sort.
Private office and storage for all teachers within their classroom		●					●			Locker area off staff rooms.
Add a nurse's office					●		●		●	
Lockers for students, currently sharing							●			
Re-think vehicular access and circulation so that the community entrance to the school and sports fields is welcoming					●		●		●	
New grandstand including press box, concessions, and restrooms							●	●	●	
New turf football/soccer field and lighting							●	●	●	
New turf softball and baseball fields and lighting							●	●	●	Add concessions.
New turf practice field							●		●	
Resurface track		●				●				
New scoreboards for all fields							●			

INFRASTRUCTURE, ACCESS, AND SAFETY	Low Priority			Moderate Priority			High Priority			Comments
Replace roof							●	●	●	Highest of priorities!
ADA access to the mezzanine levels (gym, fitness)	●							●	●	
Science lab ventilation and chemical storage upgrades							●	●	●	
Replace outdated tech equipment					●	●				
Interior entry for room 21					●	●			●	
Fix extermination concerns in “south hall”							●	●	●	
Remodel restroom partitions to increase safety and privacy		●					●		●	District wide.
Upgrade ventilation for woodshop/welding shop	●				●				●	Garage doors on weld shop, vent wood.
Upgrade ventilation for photography dark room	●	●							●	
Seismic upgrades							●	●	●	
Exterior Improvements — replace single pane windows, replace damaged doors, repair walls, repaint		●				●			●	Larger reader/info board, fit mult langs.
Interior Improvements — replace damaged flooring, ceiling, and wall surfaces		●	●						●	
Replace damaged plumbing and fixtures					●		●		●	
Resurface and restripe driveways and parking lots	●	●							●	
Security vestibules at all three schools									●	
Safety and Intrusion hardening at all three schools									●	

GROWTH AND CAPACITY NEEDS	Low Priority			Moderate Priority			High Priority			Comments
Increase opportunities for dining areas throughout school	●				●				●	Furn, not space prob — tables huge, no space between.
Increase the size of the commons and kitchen to serve the high school population				●	●				●	Future growth, now fine, but not with new houses, etc.

A VALUE-BASED PLAN FOR THE FUTURE

MASTER PLANNING EXERCISE

The committee spent the end of the last meeting working with aerial plans that included floor plan overlays of each school. As one group, the committee was asked to use the virtual meeting platform's tools to sketch or draw ideas for capital projects. The following are the major takeaways from that discussion:

Gervais Elementary School

Gervais Middle School

KEY TAKEAWAYS

- Although it is not on the historic register, the façade of the elementary school is a community asset — any modernizations would be preferred to somehow honor that history.
- Could the elementary school expand north with an addition/remodel that would enable all fifth grade classrooms to be in the main building.
- The play structure out by the softball field needs to move closer to the elementary school building for supervision purposes.
- The middle school has a capacity need and a classroom-size issue. IBI coordinated with the manufacturer to determine which interior walls in the middle school building were structural bearing walls (drawn in orange below). All exterior walls are bearing walls. One solution could be to demolish non-bearing walls and increase a classroom by 50% and leave the other 50% for much needed support spaces like staff rooms and health rooms.
- To solve the challenge of common gathering, dining, and presentation spaces at the middle school, a new "hub" could be built (large red circle drawn in the NW corner of the Gervais Middle school site) that includes a new main entry and face of the school, science and STE(A)M labs, and a large common space to bring the middle school community together.

Gervais High School

- The high school could add covered outdoor areas for kids to gather — either in the existing courtyard or between the two wings.
- The large front yard greenspace between the high school and parking area is underutilized. Could this be a place for an addition?
- At all schools, students could potentially contribute in creating more usable outdoor recreation and learning spaces through their workshop classes/clubs to create items like benches, etc.

FUNDING

Gervais School District continues to work with the LRFP Committee to create a schedule for addressing facility needs based on building condition, capacity, and program requirements over the next 10 years. The Facility Condition Assessments identify $7,060,912 in facility repair and maintenance projects across all District buildings. The Seismic Evaluations identify $4,039,000 in retrofit costs.

The LRFP Committee made great efforts to prioritize projects that were identified by the Educational Adequacy, Facility Condition and Seismic Assessments. Educational Adequacy deficiencies and other possible projects that the Committee developed were not given cost estimates. Such improvements will be estimated during pre-bond planning, as applicable.

It is anticipated that major capital improvements would require funding by a future general obligation bond. Some immediate infrastructure improvements may be addressed in the short-term using operational funds including:

- Building envelope repairs — windows, roofs, and doors
- Mechanical, electrical, and plumbing repairs and/or replacements
- Safety upgrades — IT systems, building security and communication systems, site playgrounds and athletic field safety upgrades

Other projects may be completed using grant funding or special state funding sources such as the Student Success Act, Seismic Grant, or Measure 98, including:

- Upgrading facilities to meet the requirements of students with special needs
- Increased counseling and mental health supports
- CTE upgrades at the high school level
- Technology upgrades
- Seismic upgrades

The District has not yet developed a schedule for a future bond but will seek out all available incentives and grants available including the State Oregon School Capital Improvement Matching (OSCIM) grant funds prior to any bond election.

A

APPENDIX

THIS PAGE IS INTENTIONALLY LEFT BLANK
FOR PRINTING PURPOSES

A.1

OAR 581-027-0040 COMPLIANCE GUIDE

Description of OAR 581-027-0040 Compliance

Gervais School District has completed the 1) Long-Range Facility Plan, 2) Facility Assessments, and 3) Seismic Evaluations as a result of having received the Oregon Department of Education's Technical Assistance Program (TAP) grant. In keeping with the requirements of the grant, the Long-Range Facility Plan meets all criteria set forth in OAR 581-027-0040.

Population projections by school age group for the next ten years using U.S. Census or Census partner data

Population projections are Included in the Appendix of the Long-Range Facility Plan report. Projections were prepared using data from the Population Research Center at Portland State University and historic age group population estimates from the US Census Bureau's American Community Survey.

Collaboration with local government planning agencies

There is currently no plan to build a new school on undeveloped land.

Evidence of community involvement

Several members of the Long-Range Planning Committee are community representatives. See the "Acknowledgements" section of the report. The process and community vision are included on page 3.

Identification of buildings on historic preservation lists

See page 10 of the LRFP report.

Analysis of district's current facilities' ability to meet district-adopted educational adequacy standards

See pages 16 to 26 for complete educational adequacy assessment results and methodology as well as capacity analysis and potential changes needed at each facility.

A description of the plan the district will undertake to change its facility to match the projections and needs for the district for the next ten years.

See pages 36 to 45 for a full description of project prioritization at each facility as well as a potential solutions.

A.2

POPULATION PROJECTION REPORT

IBI GROUP
3rd Floor – 227-11 Avenue SW
Calgary AB T2R 1R9 Canada
tel 403 270 5600 fax 403 270 5610
ibigroup.com

Memorandum

To/Attention	Rebecca Stuecker	**Date**	November 30, 2020
From	David Sol	**Project No**	122481
cc	Amanda Polini		
Subject	Gervais SD Enrollment Projections		

This memo summarizes the process of estimating future enrollment numbers in the Gervais School District (SD) based on existing data. This estimate relied on projections for Marion County population centres from 2017, historical population data to 2018, and enrollment data up to 2019.

Enrollment numbers in Gervais SD between 2009 and 2019 are illustrated in the chart below.

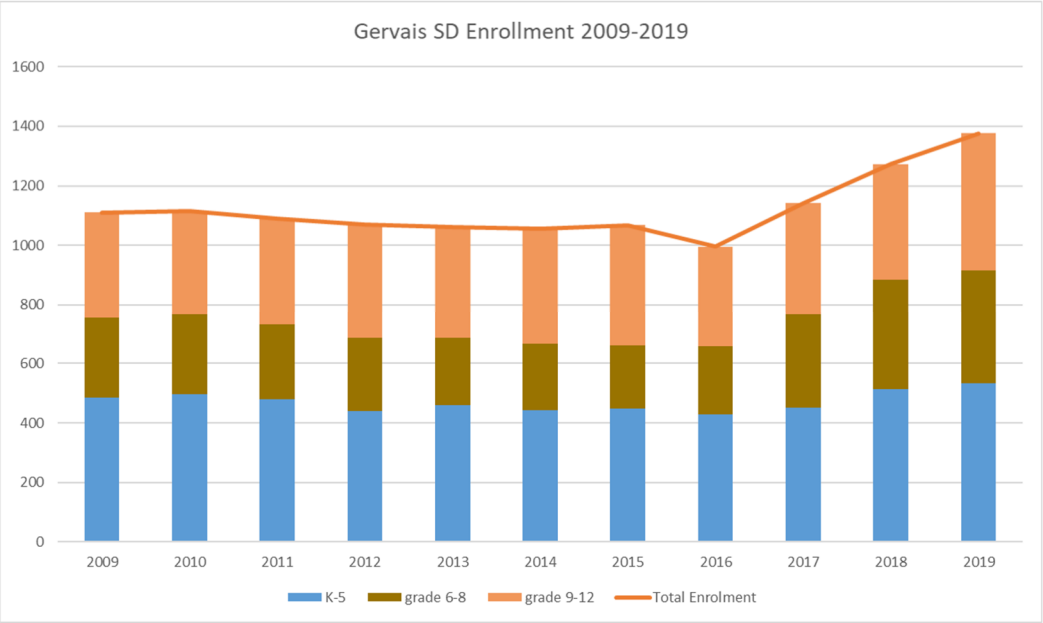

Over this period, the annual growth rates were 1% for K-5, 4.3% for 6-8, and 2.9% for 9-12.

Future enrollment is primarily a product of future school-age populations within the district. At this time, the only source of age-based population projections is the Coordinated Population Forecast 2017-2067, Marion County, prepared by the Population Research Center at Portland State University in 2017. Appendix C of the report (attached) provides a county-wide population by five-year age group forecast, as well as a total population forecast for Marion County sub-areas.

There are no age-specific projections for Gervais growth boundary or school district. Therefore, Gervais SD enrollment and county age group populations for nine years between 2009 and 2018 were used to determine a historic capture rate for Gervais SD, by age and grade group. The

enrollment numbers were obtained from the Oregon Department of Education.[1] Historic age group population estimates were obtained from the US Census Bureau's American Community Survey.[2]

Using historic share and county-wide population growth projections could overstate growth within Gervais SD if the County's growth is driven by other population centres. Therefore, the sub area total population projections were analysed to determine the balance of growth across the county. The table below is adapted from Appendix C, Figure 22, and shows the percentage of total population for each sub-area for each forecast year.

Marion County Sub-Area Forecasts as Percentage of County Population

Area / Year	2020	2025	2030	2035	2040
Marion County	350,125	370,099	388,420	405,352	421,508
Aumsville UGB	1.4%	1.4%	1.5%	1.5%	1.5%
Aurora UGB	0.3%	0.3%	0.3%	0.3%	0.3%
Detroit UGB	0.1%	0.1%	0.1%	0.1%	0.1%
Donald UGB	0.3%	0.3%	0.3%	0.4%	0.4%
Gates UGB (Marion)	0.1%	0.1%	0.1%	0.1%	0.1%
Gervais UGB	0.8%	0.8%	0.8%	0.8%	0.8%
Hubbard UGB	1.0%	1.0%	1.0%	1.0%	1.0%
Idanha UGB (Marion)	0.0%	0.0%	0.0%	0.0%	0.0%
Jefferson UGB	1.0%	1.0%	1.0%	1.0%	1.0%
Lyons UGB (Marion)	0.0%	0.0%	0.0%	0.0%	0.0%
Mill City UGB (Marion)	0.1%	0.1%	0.1%	0.1%	0.1%
Mount Angel UGB	1.0%	1.0%	1.0%	0.9%	0.9%
Salem/Keizer UGB (Marion)	64.7%	64.8%	65.2%	65.8%	66.4%
Scotts Mills UGB	0.1%	0.1%	0.1%	0.1%	0.1%
Silverton UGB	3.1%	3.1%	3.2%	3.2%	3.3%
St. Paul UGB	0.1%	0.1%	0.1%	0.1%	0.1%
Stayton UGB	2.4%	2.3%	2.3%	2.3%	2.3%
Sublimity UGB	0.8%	0.8%	0.8%	0.8%	0.8%
Turner UGB	0.7%	0.8%	0.8%	0.8%	0.9%
Woodburn UGB	7.8%	8.0%	8.2%	8.4%	8.6%
Outside UGB Area	14.2%	13.7%	12.9%	12.1%	11.2%

The proportion of the total population for each sub-area is surprisingly consistent, indicating relatively even growth is projected. For Gervais SD, the sub-areas of interest are Gervais UGB and the Outside UGB Area. The Gervais SD is predicted to remain a consistent proportion of growth within the County. However, the age distribution is unknown in this projection.

A second check of the population projections was made by comparing the 2017 age-group projections to the published ACS population estimates, which are the basis of the historic enrollment percentage. It was found that within the age groups of interest (0-18), the projection's populations were generally consistent with the reported numbers and no adjustment was deemed necessary.

[1] https://www.oregon.gov/ode/reports-and-data/students/Pages/Student-Enrollment-Reports.aspx
[2] https://factfinder.census.gov/faces/tableservices/jsf/pages/productview.xhtml?src=CF

The historic enrollment share by school grade and age group was then applied to the adjusted population projections. The age-group projections are provided for 2017, 2020, 2025, and onward in 5-year increments. The results of this enrollment projection process are summarized in the table below.

Year	Total Enrollment	K-5	6-8	9-12
2020	1,132	479	260	393
2025	1,167	502	257	408
2030	1,190	518	269	403
2035	1,232	533	277	422

Appendix C: Detailed Population Forecast Results

Figure 22. Marion County—Population by Five-Year Age Group

Population Forecasts by Age Group / Year	2017	2020	2025	2030	2035	2040	2045	2050	2055	2060	2065	2067
00-04	24,691	25,352	26,197	26,969	27,816	28,816	29,909	31,003	32,054	33,109	34,228	34,704
05-09	23,891	24,434	25,568	26,399	27,186	28,059	29,082	30,197	31,303	32,373	33,452	33,907
10-14	23,384	23,915	24,862	25,996	26,850	27,669	28,573	29,627	30,764	31,900	33,005	33,447
15-19	24,007	24,271	25,231	26,211	27,415	28,337	29,217	30,184	31,300	32,512	33,727	34,197
20-24	22,550	23,062	23,521	24,435	25,395	26,584	27,495	28,365	29,308	30,405	31,599	32,075
25-29	22,780	23,029	23,943	24,404	25,363	26,382	27,635	28,597	29,506	30,500	31,658	32,158
30-34	22,140	22,839	23,290	24,200	24,675	25,666	26,714	27,998	28,977	29,911	30,935	31,408
35-39	21,200	21,626	22,818	23,254	24,175	24,671	25,679	26,747	28,038	29,033	29,987	30,402
40-44	20,767	21,541	22,308	23,530	23,994	24,970	25,503	26,563	27,678	29,032	30,083	30,485
45-49	20,489	21,097	22,468	23,267	24,568	25,082	26,128	26,708	27,833	29,026	30,473	30,922
50-54	20,268	20,250	21,293	22,655	23,469	24,800	25,324	26,384	26,962	28,097	29,307	29,886
55-59	20,094	20,175	20,174	21,201	22,565	23,395	24,739	25,272	26,331	26,916	28,062	28,546
60-64	19,054	19,778	19,943	19,939	20,973	22,349	23,197	24,553	25,093	26,164	26,768	27,228
65-69	16,306	17,739	18,919	19,078	19,111	20,154	21,518	22,379	23,729	24,287	25,366	25,616
70-74	13,300	15,253	17,442	18,438	18,448	18,344	19,200	20,338	20,978	22,064	22,398	22,716
75-79	9,613	11,445	14,313	16,258	17,078	16,985	16,789	17,466	18,377	18,834	19,682	19,748
80-84	6,698	7,546	10,033	12,448	14,041	14,641	14,451	14,175	14,626	15,261	15,509	15,731
85+	6,535	6,771	7,778	9,740	12,230	14,603	16,387	17,419	17,981	18,701	19,632	19,965
Total	**337,773**	**350,125**	**370,099**	**388,420**	**405,352**	**421,508**	**437,540**	**453,978**	**470,837**	**488,126**	**505,872**	**513,142**

Population Forecasts prepared by: Population Research Center, Portland State University, June 30, 2017.

Figure 23. Marion County's Sub-Areas—Total Population

Area / Year	2017	2020	2025	2030	2035	2040	2045	2050	2055	2060	2065	2067
Marion County	337,773	350,125	370,099	388,420	405,352	421,508	437,540	453,978	470,837	488,126	505,872	513,142
Aumsville UGB	4,209	4,750	5,253	5,731	6,141	6,501	6,768	7,001	7,197	7,390	7,582	7,658
Aurora UGB	1,028	1,080	1,168	1,248	1,321	1,387	1,445	1,496	1,538	1,580	1,613	1,622
Detroit UGB	216	218	222	225	227	229	231	232	234	235	237	237
Donald UGB	994	1,011	1,172	1,355	1,555	1,705	1,820	1,922	2,007	2,072	2,128	2,150
Gates UGB (Marion)	435	441	449	456	462	467	472	476	481	484	488	489
Gervais UGB	2,657	2,781	2,996	3,175	3,346	3,494	3,618	3,716	3,789	3,834	3,853	3,850
Hubbard UGB	3,375	3,527	3,711	3,893	4,074	4,256	4,440	4,626	4,791	4,958	5,127	5,195
Idanha UGB (Marion)	80	81	83	84	85	87	88	90	92	93	95	96
Jefferson UGB	3,318	3,446	3,664	3,866	4,071	4,279	4,470	4,641	4,814	4,988	5,165	5,237
Lyons UGB (Marion)	53	53	53	53	53	53	53	53	53	53	53	53
Mill City UGB (Marion)	309	313	319	326	333	339	345	351	357	363	369	371
Mount Angel UGB	3,551	3,570	3,665	3,757	3,847	3,935	4,023	4,110	4,196	4,282	4,369	4,403
Salem/Keizer UGB (Marion)	218,689	226,495	239,794	253,349	266,626	279,724	292,908	306,297	319,963	333,816	347,730	353,218
Scotts Mills UGB	384	402	427	448	465	480	494	507	521	535	548	554
Silverton UGB	10,214	10,701	11,545	12,341	13,076	13,759	14,406	15,032	15,631	16,193	16,704	16,889
St. Paul UGB	401	409	420	431	441	452	463	475	487	499	512	517
Stayton UGB	8,138	8,330	8,696	9,065	9,432	9,798	10,174	10,552	10,936	11,318	11,695	11,841
Sublimity UGB	2,857	2,930	3,060	3,193	3,316	3,430	3,534	3,628	3,714	3,789	3,854	3,876
Turner UGB	2,066	2,355	2,925	3,214	3,439	3,655	3,859	4,050	4,225	4,382	4,541	4,605
Woodburn UGB	26,211	27,399	29,608	31,923	34,187	36,322	38,330	40,246	42,077	43,839	45,574	46,262
Outside UGB Area	48,587	49,833	50,870	50,289	48,857	47,158	45,599	44,476	43,737	43,422	43,638	44,020

Population Forecasts prepared by: Population Research Center, Portland State University, June 30, 2017.

A.3

FACILITY ASSESSMENT REPORT

FACILITY ASSESSMENT 2019

GERVAIS SCHOOL DISTRICT

By IBI Group Architects, Inc. December 2019

IBI + GERVAIS SCHOOLS est. 1834

December 19, 2019

Gervais School District

290 First Street

Gervais, Oregon 97026

Attn: Dandy Stevens

To whom it may concern,

In accordance with our contract, the project team visited the Gervais School District Facilities on October 9th and 10th and performed limited visual assessments of the Gervais District Office, Elementary School buildings, Middle School, Gervais High School building, along with the Daycare, Welcome Center and the Samuel Brown Academy. Data for the assessments were compiled into the Oregon Department of Education Assessment Template for each major building as shown in Tables 1 and 2 below.

Table 1: Main Buildings

Main Buildings		
Building	**Gross Area (SF)**	**Year Built**
District Office	3,000	2000
Gervais Elementary School buildings	97,295	1934, 1973, 1990, 2013
Gervais Middle School buildings	30,424	1999, 2013, 2015
Gervais High School buildings	78,790	1963, 2009

Table 2: Secondary Buildings

Secondary Buildings		
Building	**Gross Area (SF)**	**Year Built**
Welcome Center & Pre-School	3,500	1995, 2007
Daycare	1,750	1992
Samuel Brown Academy	1,452	1995

Immediate Health and Safety Concerns

No immediate health and safety concerns were found.

General Findings

In general, the building structures and exterior envelopes are in good condition. There is was some deferred maintenance observed at all the buildings. This includes a badly needed roof at the High School's main building. The Elementary School's main buildings is very old however, visually the structure is sound. There were no major concerns noted for the Main Buildings however, exterior finishes and windows were an issue at the high school an elementary school. Costs for the recommended structural and exterior improvements for all the Major Buildings are provided in Table 3, below.

Table 3: Structural and Exterior Improvement Costs

Structural and Exterior Upgrade Costs		
Building	**Structural Upgrade Cost**	**Exterior Upgrade Cost**
District Office	$0	$0
Elementary School buildings	$81,387	$473,729
Middle School buildings	$0	$4,250
High School buildings	$0	$2,189,574

The noted electrical and mechanical repairs with the highest likely cost are; mechanical upgrades to the Elementary School's main building. The elementary school main building does not have air conditioning or modern controls for heating. The elementary school's gym/cafeteria has athletic related plumbing fixtures that have been left unused which does not show up in this assessment. Most of the plumbing piping at all the schools is original and for the older buildings age will begin to display problems. Estimated costs to upgrade the electrical and mechanical systems for all the Major Buildings are shown in Table 4, below.

Table 4: Electrical and Mechanical Upgrade Costs

Electrical and Mechanical Upgrade Costs		
Building	**Electrical Upgrade Cost**	**Mechanical Upgrade Cost**
District Office	$0	$0
Elementary School buildings	$0	$365,975
Middle School buildings	$0	$0
High School buildings	$7,146	$89,229

Recommended interior improvements are primarily cosmetic in nature and age-related. Replacing doors and/or making accessibility hardware improvements and replacing deteriorated flooring, ceilings and wainscot are the most common suggested work items, especially at the three older elementary school buildings. Costs for recommended interior improvements are provided in Table 5, below.

Table 5: Interior Improvement Costs

Interior Upgrade Costs	
Building	**Interior Upgrade Cost**
District Office	$2,093
Elementary School buildings	$163,545
Middle School buildings	$60,138
High School buildings	$675,112

For the Secondary Buildings, recommended improvements were minor. The buildings are pre-fab wooden structures that are simply showing normal wear. The Samuel Brown Academy has the most need for an upgrade while the relatively large cost shown for the Welcome Center & Pre-School is due to the older of the two structures that make up that facility. Costs for repairs to the Secondary Buildings are provided in Table 6, below.

Table 6: Improvement Costs for Secondary Buildings

Improvement Costs for Secondary Buildings	
Building	**Improvement Cost**
Welcome Center & Pre-School	$19,927
Daycare	$3,337
Samuel Brown Academy	$15,993

The largest site expense noted is resurfacing the driveways and parking areas. This includes paving existing gravel parking lots and driveways. Recommended site improvement costs are provided in Table 7, below.

Table 7: Site Improvement Costs

Site Improvement Costs	
Improvement	**Cost**
Driveway and Parking Lot Resurfacing	$789,665
Pedestrian Pavement Repairs	$9,234

Summary and Conclusions

In general, the observed buildings are in a condition better to be expected given their age and environment. The buildings are generally serviceable with no serious safety concerns. The District has taken good care of the older buildings. It should be noted that the assessment did not include a seismic evaluation. As Oregon is in a known area of seismic activity, an evaluation to determine seismic performance and vulnerabilities of the Main Buildings, as a priority, is recommended.

Total recommended improvement costs are provided in Table 8, below.

Table 8: Total Recommended Improvement Costs

Total Recommended Improvement Costs		
Asset	**Cost**	**Cost with Development Costs**
District Office	$118,824	$163,977
Elementary School buildings	$1,120,231	$1,545,919
Middle School buildings	$198,756	$274,283
High School buildings	$3,548,956	$4,897,559
Welcome Center & Pre-School	$19,927	$27,499
Daycare	$93,917	$129,605
Samuel Brown Academy	$15,993	$22,070
	Grand Total:	$7,060,912

DISTRICT OFFICE

Base Information Sheet

Item	Data	Notes / Explanation
District Name:	Gervais SD 1	Pull-down menu of the 197 Districts
Site Name:	District Office	Typically the name that is used for the facility / campus
Building Name:	Main	If only one building on site, refer to "main"
Building ID:	21370000	Please use the same ID that is assigned to this building in the annual Building Collection.
Building Type:	Administrative Building	Pull-down menu - feeds FCI calculation
Physical Address of Building:	290 First Street	Informational only - does not link
Original Year of Building Completion	2000	When was the original building completed and ready for use
Original Construction Type	Pre-fab wood construction	What type of construction was used to complete original building
Describe Other Construction Type		If you choose other construction type please describe here
County:	Marion	Pull-down menu of the 36 counties - sets location factor for budgets
Gross Square Footage:	3,000	Calculated from exterior face of walls (excluding eaves, outbuilding, porches, canopies, and similar)
Site Acreage:	0.9	District records
Assessor Company:	IBI Group	Certified company
Assessor Name:	Steve Winkle, Kate Barbaria	For follow up questions
Contact (Phone):	503-273-9192	
Contact (E-Mail):	steve.winkle@ibigroup.com	
Date of Assessment:	October 09-10, 2019	Might reference back for inflation calculation (future)

*Building ID Format: Located in ODE "Buildings Collection" database

Physical Condition Assessment

District Name: Gervais SD 1
Site Name: District Office
Building Name: Main
Building ID: 21370000

REMINDER: FILL OUT ALL INFORMATION ON '*BASE INFORMATION SHEET*' BEFORE ENTERING DATA ON THIS SHEET

An unused cell or system that should not receive direct user input

An automatically populated cell from user input elsewhere in the file - do not overwrite

Level 1	Level 2	Level 3	Type (as applicable)	% of Building or Number		None		Minor		Moderate		Major		Replace as part of Renovation	% of System or Finish	Automated Budget Estimate	Notes
					LEVEL OF ACTION												
A SUBSTRUCTURE																	
	A10 Foundations																
		A1010 Standard Foundations		100%	X	None		Minor		Moderate		Major		Replace		$0	
		A1020 Special Foundations			o	None		Minor		Moderate		Major		Replace		$0	
		A1030 Slab on Grade			o	None		Minor		Moderate		Major		Replace		$0	
	A20 Basement Construction																
		A2010 Basement Excavation	NOT USED			None		Minor		Moderate		Major		Replace			
		A2020 Basement Walls			o	None		Minor		Moderate		Major		Replace		$0	
B SHELL																	
	B10 Superstructure																
		B1010 Floor Construction	Wood	100%	X	None		Minor		Moderate		Major		Replace		$0	
			Steel		o	None		Minor		Moderate		Major		Replace		$0	
			Concrete		o	None		Minor		Moderate		Major		Replace		$0	
		B1020 Roof Construction	Wood	100%	X	None		Minor		Moderate		Major		Replace		$0	
			Steel		o	None		Minor		Moderate		Major		Replace		$0	
			Concrete		o	None		Minor		Moderate		Major		Replace		$0	
	B20 Exterior Enclosure																
		B2010 Exterior Walls	Concrete Formed / Tilt		o	None		Minor		Moderate		Major		Replace		$0	
			Masonry		o	None		Minor		Moderate		Major		Replace		$0	
			Framed w/ Wood Siding	100%	x	None		Minor		Moderate		Major		Replace		$0	
			Framed w/Metal Panel		o	None		Minor		Moderate		Major		Replace		$0	
			Framed w/Stucco		o	None		Minor		Moderate		Major		Replace		$0	
			Framed w/Masonry Veneer		o	None		Minor		Moderate		Major		Replace		$0	
		B2020 Exterior Windows	Wood		o	None		Minor		Moderate		Major		Replace		$0	
			Aluminum/Steel		o	None		Minor		Moderate		Major		Replace		$0	
			Clad	100%	x	None		Minor		Moderate		Major		Replace		$0	
			Curtain Wall		o	None		Minor		Moderate		Major		Replace		$0	
		B2030 Exterior Doors	Wood	4	x	None		Minor		Moderate		Major		Replace		$0	
			Hollow Metal	1	x	None		Minor		Moderate		Major		Replace		$0	
			Storefront		o	None		Minor		Moderate		Major		Replace		$0	
	B30 Roofing																
		B3010 Roof Coverings	Asphalt Shingle	0%		None		Minor		Moderate		Major		Replace		$0	
			Built-Up	0%		None		Minor		Moderate		Major		Replace		$0	
			Single Ply	0%		None		Minor		Moderate		Major		Replace		$0	
			Metal	100%	x	None		Minor		Moderate		Major		Replace		$0	
			Concrete Tile	0%		None		Minor		Moderate		Major		Replace		$0	
		B3020 Roof Openings	Skylights	0%		None		Minor		Moderate		Major		Replace		$0	By Building GSF
			Access Hatch	0		None		Minor		Moderate		Major		Replace		$0	Per hatch
C INTERIORS																	
	C10 Interior Construction																
		C1010 Partitions	Framed	100%	x	None		Minor		Moderate		Major		Replace		$0	

	Masonry		o	None		Minor		Moderate		Major		Replace		$0	
C1020 Interior Doors	Wood	6	x	None		Minor		Moderate		Major		Replace		$0	
	Hollow Metal		o	None		Minor		Moderate		Major		Replace		$0	
C1030 Fittings	NOT USED			None		Minor		Moderate		Major		Replace			
C20 Stairs															
C2010 Stair Construction	Wood		o	None		Minor		Moderate		Major		Replace		$0	Cost/Flight
	Metal		o	None		Minor		Moderate		Major		Replace		$0	Cost/Flight
	Concrete		o	None		Minor		Moderate		Major		Replace		$0	Cost/Flight
C2020 Stair Finishes	Concrete Fill		o	None		Minor		Moderate		Major		Replace		$0	Cost/Flight
	Resilient		o	None		Minor		Moderate		Major		Replace		$0	Cost/Flight
C30 Interior Finishes															
C3010 Wall Finishes	Paint on Masonry		o	None		Minor		Moderate		Major		Replace		$0	
	Wallboard	90%	x	None		Minor		Moderate		Major		Replace		$0	
	Wainscot	10%		None	x	Minor		Moderate		Major		Replace	100%	$691	
	Ceramic Tile		o	None		Minor		Moderate		Major		Replace		$0	
C3020 Floor Finishes	Carpet / Soft Surface	80%		None		Minor		Moderate		Major		Replace		$0	
	Resilient Tile		o	None		Minor		Moderate		Major		Replace		$0	
	Resilient Sheet	20%		None		Minor		Moderate		Major	x	Replace	15%	$1,231	Restroom floor finish is cracking/degrading
	Polished Concrete		o	None		Minor		Moderate		Major		Replace		$0	
	Ceramic Tile		o	None		Minor		Moderate		Major		Replace		$0	
	Liquid Applied		o	None		Minor		Moderate		Major		Replace		$0	
	Wood Sports Floor		o	None		Minor		Moderate		Major		Replace		$0	
C3030 Ceiling Finishes	Wallboard		o	None		Minor		Moderate		Major		Replace		$0	
	Lay-In Ceiling Tile	100%		None	x	Minor		Moderate		Major		Replace	5%	$171	
	Glued-Up Ceiling Tile		o	None		Minor		Moderate		Major		Replace		$0	
	Painted Structure		o	None		Minor		Moderate		Major		Replace		$0	
D SERVICES															
D10 Conveying															
D1010 Elevators & Lifts			o	None		Minor		Moderate		Major		Replace		$0	
D1020 Escalators & Moving Walks			o	None		Minor		Moderate		Major		Replace		$0	
D1090 Other Conveying Systems			o	None		Minor		Moderate		Major		Replace		$0	
D20 Plumbing															
D2010 Plumbing Fixtures		20%	x	None		Minor		Moderate		Major		Replace		$0	All (N) fixtures must meet ADA requirements by code.
D2020 Domestic Water Distribution		20%	x	None		Minor		Moderate		Major		Replace		$0	
D2030 Sanitary Waste		20%	x	None		Minor		Moderate		Major		Replace		$0	
D2040 Rain Water Drainage		100%	x	None		Minor		Moderate		Major		Replace		$0	
D2090 Other Plumbing Systems	NOT USED			None		Minor		Moderate		Major		Replace			
D30 HVAC															
D3010 Energy Supply		100%	x	None		Minor		Moderate		Major		Replace		$0	
D3020 Heat Generating Systems	Boiler		o	None		Minor		Moderate		Major		Replace		$0	
	Air Handler		o	None		Minor		Moderate		Major		Replace		$0	
	Furnace		o	None		Minor		Moderate		Major		Replace		$0	
	Heat Exchanger		o	None		Minor		Moderate		Major		Replace		$0	
D3030 Cooling Generating Systems	Component of air handler	100%	x	None		Minor		Moderate		Major		Replace		$0	
	Stand alone chiller		o	None		Minor		Moderate		Major		Replace		$0	
D3040 Distribution Systems	Ductwork		o	None		Minor		Moderate		Major		Replace		$0	
	Hot water return & supply		o	None		Minor		Moderate		Major		Replace		$0	
D3050 Terminal & Package Units	Above ceiling VAV unit		o	None		Minor		Moderate		Major		Replace		$0	
	In-room ventilator unit	100%	x	None		Minor		Moderate		Major		Replace		$0	
	In-room radiant unit		o	None		Minor		Moderate		Major		Replace		$0	

D3060 Controls & Instrumentation		100%	x	None		Minor		Moderate		Major		Replace		$0	
D3070 Systems Testing & Balancing		100%	x	None		Minor		Moderate		Major		Replace		$0	
D3090 Other HVAC Systems & Equipment	NOT USED			None		Minor		Moderate		Major		Replace			
D40 Fire Protection															
D4010 Sprinklers			o	None		Minor		Moderate		Major		Replace		$0	
D4020 Standpipes			o	None		Minor		Moderate		Major		Replace		$0	
D4030 Fire Protection Specialties		100%	x	None		Minor		Moderate		Major		Replace		$0	
D4090 Other Fire Protection Systems	NOT USED			None		Minor		Moderate		Major		Replace			
D50 Electrical															
D5010 Electrical Service & Distribution		100%	x	None		Minor		Moderate		Major		Replace		$0	
D5020 Lighting and Branch Wiring		100%	x	None		Minor		Moderate		Major		Replace		$0	
D5030 Communications & Security	Voice / Data System	100%	x	None		Minor		Moderate		Major		Replace		$0	
	Clock / Intercom System	100%	x	None		Minor		Moderate		Major		Replace		$0	
	Closed Circuit Surveillance	100%	x	None		Minor		Moderate		Major		Replace		$0	
	Access Control System		o	None		Minor		Moderate		Major		Replace		$0	
	Intrusion Alarm System	100%	x	None		Minor		Moderate		Major		Replace		$0	
	Fire Alarm / Detection	100%	x	None		Minor		Moderate		Major		Replace		$0	
	Lighting Control System	100%	x	None		Minor		Moderate		Major		Replace		$0	lights on sensors
D5090 Other Electrical Systems	NOT USED			None		Minor		Moderate		Major		Replace			
E EQUIPMENT & FURNISHINGS															
E10 Equipment															
E1010 Commercial Equipment	Food Service		o	None		Minor		Moderate		Major		Replace		$0	
	Vocational		o	None		Minor		Moderate		Major		Replace		$0	
E1020 Institutional Equipment	Science		o	None		Minor		Moderate		Major		Replace		$0	
	Art		o	None		Minor		Moderate		Major		Replace		$0	
	Stage Performance		o	None		Minor		Moderate		Major		Replace		$0	Cost/SF of Stage Performance Area
	Restroom Accessories/Stalls	2%		None		Minor		Moderate		Major	x	Replace	50%	$68	Stalls hardware should be replaced
E1030 Vehicular Equipment	NOT USED			None		Minor		Moderate		Major		Replace			
E1090 Other Equipment	NOT USED			None		Minor		Moderate		Major		Replace			
E20 Furnishings															
E2010 Fixed Furnishings		5%	x	None		Minor		Moderate		Major		Replace		$0	
E2020 Movable Furnishings		35%	x	None		Minor		Moderate		Major		Replace		$0	
F SPECIAL CONSTRUCTION & DEMOLITION - NOT USED															
G BUILDING SITE WORK															
G10 Site Preparation	NOT USED														
G20 Site Improvements															
G2010 Roadways		2000	x	None		Minor		Moderate		Major		Replace		$0	Cost/SF of surface area
G2020 Parking Lots		24600		None		Minor		Moderate		Major	x	Replace	52%	$116,663	Cost/SF of surface area
G2030 Pedestrian Paving		625	x	None		Minor		Moderate		Major		Replace		$0	Cost/SF of surface area (covered area between buildings)
G2040 Site Development			o	None		Minor		Moderate		Major		Replace		$0	Cost/LF of fencing
G2050 Landscaping			o	None		Minor		Moderate		Major		Replace		$0	Cost/SF of irrigated area
G30 Site Mechanical Utilities															
G3010 Water Supply	Domestic	110	x	None		Minor		Moderate		Major		Replace		$0	Enter LF of pipe in cell E143
	Fire		o	None		Minor		Moderate		Major		Replace		$0	Enter LF of pipe in cell E144
G3020 Sanitary Sewer		110	x	None		Minor		Moderate		Major		Replace		$0	Enter LF of pipe in cell E145
G3030 Storm Sewer		110	x	None		Minor		Moderate		Major		Replace		$0	Enter SF of area to be drained
G3040 Heating Distribution			o	None		Minor		Moderate		Major		Replace		$0	Enter LF of pipe in cell E147
G3050 Cooling Distribution			o	None		Minor		Moderate		Major		Replace		$0	Enter LF of pipe in cell E148

G3060 Fuel Distribution		110	x	None	Minor	Moderate	Major	Replace		$0	Enter LF of pipe in cell E149
G3090 Other Site Mechanical Utilities	NOT USED			None	Minor	Moderate	Major	Replace			
G40 Site Electrical Utilities											
G4010 Electrical Distribution	Service	100%	x	None	Minor	Moderate	Major	Replace		$0	
	Generator		o	None	Minor	Moderate	Major	Replace		$0	
G4020 Site Lighting		100%	x	None	Minor	Moderate	Major	Replace		$0	
G4030 Site Communications & Security		100%	x	None	Minor	Moderate	Major	Replace		$0	
G4090 Other Site Electrical Utilities	NOT USED			None	Minor	Moderate	Major	Replace			
G90 Other Site Construction	NOT USED										

OTHER

Description of System	Unit of Measure	Quantity	Unit Budget	Extended	Notes
				$0	
				$0	
				$0	
				$0	
				$0	
				$0	
				$0	

Physical Condition Budget Sub-Total	**$118,824**
Budgeted Development Costs	**$45,153**
Physical Condition Budget TOTAL	**$163,977**
Cost with Escalation to June 2021	**$186,934**
Cost with Escalation to June 2022	**$194,411**
Cost with Escalation to June 2023	**$202,187**
Replacement Budget	**$1,510,272**

ELEMENTARY SCHOOL BUILDINGS

Base Information Sheet

Item	Data	Notes / Explanation
District Name:	Gervais SD 1	Pull-down menu of the 197 Districts
Site Name:	Gervais Elementary School	Typically the name that is used for the facility / campus
Building Name:	Gervais Elementary	If only one building on site, refer to "main"
Building ID:	21370100	Please use the same ID that is assigned to this building in the annual Building Collection.
Building Type:	Elementary School	Pull-down menu - feeds FCI calculation
Physical Address of Building:	150 Douglas Ave	Informational only - does not link
Original Year of Building Completion	1934	When was the original building completed and ready for use
Original Construction Type	Wood Frame	What type of construction was used to complete original building
Describe Other Construction Type		If you choose other construction type please describe here
County:	Marion	Pull-down menu of the 36 counties - sets location factor for budgets
Gross Square Footage:	62,460	Calculated from exterior face of walls (excluding eaves, outbuilding, porches, canopies, and similar)
Site Acreage:	5.75	District records
Assessor Company:	IBI Group	Certified company
Assessor Name:	Steve Winkle, Kate Barbaria	For follow up questions
Contact (Phone):	503-273-9192	
Contact (E-Mail):	steve.winkle@ibigroup.com	
Date of Assessment:	October 09-10, 2019	Might reference back for inflation calculation (future)

*Building ID Format: Located in ODE "Buildings Collection" database

Base Information Sheet

Item	Data	Notes / Explanation
District Name:	Gervais SD 1	Pull-down menu of the 197 Districts
Site Name:	Gervais Elementary School	Typically the name that is used for the facility / campus
Building Name:	Gervais Elementary K-2 Building	If only one building on site, refer to "main"
Building ID:	21370102	Please use the same ID that is assigned to this building in the annual Building Collection.
Building Type:	Elementary School	Pull-down menu - feeds FCI calculation
Physical Address of Building:	150 Douglas Ave	Informational only - does not link
Original Year of Building Completion	2013	When was the original building completed and ready for use
Original Construction Type	Wood Frame Modular Building	What type of construction was used to complete original building
Describe Other Construction Type		If you choose other construction type please describe here
County:	Marion	Pull-down menu of the 36 counties - sets location factor for budgets
Gross Square Footage:	12,224	Calculated from exterior face of walls (excluding eaves, outbuilding, porches, canopies, and similar)
Site Acreage:	0.77	District records
Assessor Company:	IBI Group	Certified company
Assessor Name:	Steve Winkle, Kate Barbaria	For follow up questions
Contact (Phone):	503-273-9192	
Contact (E-Mail):	steve.winkle@ibigroup.com	
Date of Assessment:	October 09-10, 2019	Might reference back for inflation calculation (future)

*Building ID Format: Located in ODE "Buildings Collection" database

Base Information Sheet

Item	Data	Notes / Explanation
District Name:	Gervais SD 1	Pull-down menu of the 197 Districts
Site Name:	Gervais Elementary School	Typically the name that is used for the facility / campus
Building Name:	Gervais Elementary Gym/Cafeteria	If only one building on site, refer to "main"
Building ID:	21370101	Please use the same ID that is assigned to this building in the annual Building Collection.
Building Type:	Gymnasium Building	Pull-down menu - feeds FCI calculation
Physical Address of Building:	200 First Street	Informational only - does not link
Original Year of Building Completion	1990	When was the original building completed and ready for use
Original Construction Type		What type of construction was used to complete original building
Describe Other Construction Type		If you choose other construction type please describe here
County:	Marion	Pull-down menu of the 36 counties - sets location factor for budgets
Gross Square Footage:	20,000	Calculated from exterior face of walls (excluding eaves, outbuilding, porches, canopies, and similar)
Site Acreage:		District records

Assessor Company:	IBI Group	Certified company
Assessor Name:	Steve Winkle, Kate Barbaria	For follow up questions
Contact (Phone):	503-273-9192	
Contact (E-Mail):	steve.winkle@ibigroup.com	
Date of Assessment:	October 09-10, 2019	Might reference back for inflation calculation (future)

*Building ID Format: Located in ODE "Buildings Collection" database

Base Information Sheet

Item	Data	Notes / Explanation
District Name:	Gervais SD 1	Pull-down menu of the 197 Districts
Site Name:	Gervais Elementary School	Typically the name that is used for the facility / campus
Building Name:	Gervais Elementary Annex Classroom Building	If only one building on site, refer to "main"
Building ID:	21370103	Please use the same ID that is assigned to this building in the annual Building Collection.
Building Type:	Elementary School	Pull-down menu - feeds FCI calculation
Physical Address of Building:	200 First Street	Informational only - does not link
Original Year of Building Completion	1973	When was the original building completed and ready for use
Original Construction Type	Wood Frame	What type of construction was used to complete original building
Describe Other Construction Type		If you choose other construction type please describe here
County:	Marion	Pull-down menu of the 36 counties - sets location factor for budgets
Gross Square Footage:	2,611	Calculated from exterior face of walls (excluding eaves, outbuilding, porches, canopies, and similar)
Site Acreage:	0	District records
Assessor Company:	IBI Group	Certified company
Assessor Name:	Steve Winkle, Kate Barbaria	For follow up questions
Contact (Phone):	503-273-9192	
Contact (E-Mail):	steve.winkle@ibigroup.com	
Date of Assessment:	October 09-10, 2019	Might reference back for inflation calculation (future)

*Building ID Format: Located in ODE "Buildings Collection" database

Physical Condition Assessment

District Name: Gervais SD 1
Site Name: Gervais Elementary School
Building Name: Gervais Elementary
Building ID: 21370100

REMINDER: FILL OUT ALL INFORMATION ON '*BASE INFORMATION SHEET*' BEFORE ENTERING DATA ON THIS SHEET

An unused cell or system that should not receive direct user input

An automatically populated cell from user input elsewhere in the file - do not overwrite

Level 1	Level 2	Level 3	Type (as applicable)	% of Building or Number	LEVEL OF ACTION												Replace as part of Renovation	% of System or Finish	Automated Budget Estimate	Notes
						None		Minor		Moderate		Major								
A SUBSTRUCTURE																				
	A10 Foundations																			
		A1010 Standard Foundations		100%	x	None		Minor		Moderate		Major		Replace			$0	
		A1020 Special Foundations			o	None		Minor		Moderate		Major		Replace			$0	
		A1030 Slab on Grade		12%	x	None		Minor		Moderate		Major		Replace			$0	
	A20 Basement Construction																			
		A2010 Basement Excavation	NOT USED			None		Minor		Moderate		Major		Replace				
		A2020 Basement Walls		12%	x	None		Minor		Moderate		Major		Replace			$0	
B SHELL																				
	B10 Superstructure																			
		B1010 Floor Construction	Wood	100%	x	None		Minor		Moderate		Major		Replace			$0	
			Steel		o	None		Minor		Moderate		Major		Replace			$0	
			Concrete		o	None		Minor		Moderate		Major		Replace			$0	
		B1020 Roof Construction	Wood	100%		None		Minor		Moderate	x	Major		Replace	15%	$81,387		
			Steel		o	None		Minor		Moderate		Major		Replace			$0	
			Concrete		o	None		Minor		Moderate		Major		Replace			$0	
	B20 Exterior Enclosure																			
		B2010 Exterior Walls	Concrete Formed / Tilt		o	None		Minor		Moderate		Major		Replace			$0	
			Masonry		o	None		Minor		Moderate		Major		Replace			$0	
			Framed w/ Wood Siding	100%		None		Minor	x	Moderate		Major		Replace	40%	$87,439	Some siding and window trim needs painting
			Framed w/Metal Panel		o	None		Minor		Moderate		Major		Replace			$0	
			Framed w/Stucco		o	None		Minor		Moderate		Major		Replace			$0	
			Framed w/Masonry Veneer		o	None		Minor		Moderate		Major		Replace			$0	
		B2020 Exterior Windows	Wood		o	None		Minor		Moderate		Major		Replace			$0	
			Aluminum/Steel		o	None		Minor		Moderate		Major		Replace			$0	
			Clad	100%	x	None		Minor		Moderate		Major		Replace			$0	
			Curtain Wall		o	None		Minor		Moderate		Major		Replace			$0	
		B2030 Exterior Doors	Wood	15	x	None		Minor		Moderate		Major		Replace			$0	
			Hollow Metal		??	None		Minor		Moderate		Major		Replace			$0	
			Storefront		o	None		Minor		Moderate		Major		Replace			$0	
	B30 Roofing																			
		B3010 Roof Coverings	Asphalt Shingle	100%		None	x	Minor		Moderate		Major		Replace	100%	$96,126	Reframe a portion of the roof to eliminate the "well" portion of the roof.
			Built-Up		o	None		Minor		Moderate		Major		Replace			$0	
			Single Ply		o	None		Minor		Moderate		Major		Replace			$0	
			Metal		o	None		Minor		Moderate		Major		Replace			$0	
			Concrete Tile		o	None		Minor		Moderate		Major		Replace			$0	
		B3020 Roof Openings	Skylights		o	None		Minor		Moderate		Major		Replace			$0	By Building GSF
			Access Hatch		o	None		Minor		Moderate		Major		Replace			$0	Per hatch
C INTERIORS																				

C10 Interior Construction													
C1010 Partitions	Framed	100%	x	None		Minor		Moderate		Major		Replace		$0	
	Masonry		o	None		Minor		Moderate		Major		Replace		$0	
C1020 Interior Doors	Wood	40	x	None		Minor		Moderate		Major		Replace		$0	
	Hollow Metal		o	None		Minor		Moderate		Major		Replace		$0	
C1030 Fittings	NOT USED			None		Minor		Moderate		Major		Replace			
C20 Stairs															
C2010 Stair Construction	Wood	1		None		Minor		Moderate	x	Major		Replace	100%	$5,700	Cost/Flight
	Metal		o	None		Minor		Moderate		Major		Replace		$0	Cost/Flight
	Concrete		o	None		Minor		Moderate		Major		Replace		$0	Cost/Flight
C2020 Stair Finishes	Concrete Fill		o	None		Minor		Moderate		Major		Replace		$0	Cost/Flight
	Resilient	1		None		Minor		Moderate		Major	x	Replace	100%	$2,850	Cost/Flight
C30 Interior Finishes															
C3010 Wall Finishes	Paint on Masonry		o	None		Minor		Moderate		Major		Replace		$0	
	Wallboard	73%	x	None		Minor		Moderate		Major		Replace		$0	
	Wainscot	27%		None	x	Minor		Moderate		Major		Replace	10%	$3,883	Old accoustical tile needs painting
	Ceramic Tile		o	None		Minor		Moderate		Major		Replace		$0	
C3020 Floor Finishes	Carpet / Soft Surface	50%		None		Minor		Moderate		Major	x	Replace	20%	$47,565	
	Resilient Tile	33%		None	x	Minor		Moderate		Major		Replace	40%	$9,493	
	Resilient Sheet	3%		None		Minor		Moderate		Major	x	Replace	50%	$12,817	
	Polished Concrete	12%		None	x	Minor		Moderate		Major		Replace		$0	
	Ceramic Tile	2%	x	None		Minor		Moderate		Major		Replace		$0	
	Liquid Applied		o	None		Minor		Moderate		Major		Replace		$0	
	Wood Sports Floor		o	None		Minor		Moderate		Major		Replace		$0	
C3030 Ceiling Finishes	Wallboard	35%		None		Minor	x	Moderate		Major		Replace	20%	$34,890	
	Lay-In Ceiling Tile	27%	x	None		Minor		Moderate		Major		Replace		$0	
	Glued-Up Ceiling Tile	24%		None	x	Minor		Moderate		Major		Replace	20%	$2,222	
	Painted Structure	14%	x	None		Minor		Moderate		Major		Replace		$0	
D SERVICES															
D10 Conveying															
D1010 Elevators & Lifts			o	None		Minor		Moderate		Major		Replace		$0	
D1020 Escalators & Moving Walks			o	None		Minor		Moderate		Major		Replace		$0	
D1090 Other Conveying Systems		2	x	None		Minor		Moderate		Major		Replace		$0	
D20 Plumbing															
D2010 Plumbing Fixtures		30%	x	None		Minor		Moderate		Major		Replace		$0	All (N) fixtures must meet ADA requirements by code. (approx. 32 fixtures)
D2020 Domestic Water Distribution		33%	x	None		Minor		Moderate		Major		Replace		$0	
D2030 Sanitary Waste		33%	x	None		Minor		Moderate		Major		Replace		$0	
D2040 Rain Water Drainage		100%	x	None		Minor		Moderate		Major		Replace		$0	
D2090 Other Plumbing Systems	NOT USED			None		Minor		Moderate		Major		Replace			
D30 HVAC															
D3010 Energy Supply		6%	x	None		Minor		Moderate		Major		Replace		$0	
D3020 Heat Generating Systems	Boiler	100%		None	x	Minor		Moderate		Major		Replace	100%	$143,833	
	Air Handler		o	None		Minor		Moderate		Major		Replace		$0	
	Furnace		o	None		Minor		Moderate		Major		Replace		$0	
	Heat Exchanger		o	None		Minor		Moderate		Major		Replace		$0	
D3030 Cooling Generating Systems	Component of air handler		o	None		Minor		Moderate		Major		Replace		$0	
	Stand alone chiller		o	None		Minor		Moderate		Major		Replace		$0	
D3040 Distribution Systems	Ductwork		o	None		Minor		Moderate		Major		Replace		$0	
	Hot water return & supply	100%	x	None		Minor		Moderate		Major		Replace	100%	$0	
D3050 Terminal & Package Units	Above ceiling VAV unit		o	None		Minor		Moderate		Major		Replace		$0	

	In-room ventilator unit		o	None		Minor		Moderate		Major		Replace		$0	
	In-room radiant unit	100%	x	None		Minor		Moderate		Major		Replace		$0	
D3060 Controls & Instrumentation		100%		None		Minor		Moderate		Major	x	Replace	100%	$191,540	No functional controls, control occurs at boiler
D3070 Systems Testing & Balancing			o	None		Minor		Moderate		Major		Replace		$0	
D3090 Other HVAC Systems & Equipment	NOT USED			None		Minor		Moderate		Major		Replace			
D40 Fire Protection															
D4010 Sprinklers			o	None		Minor		Moderate		Major		Replace		$0	
D4020 Standpipes			o	None		Minor		Moderate		Major		Replace		$0	
D4030 Fire Protection Specialties		100%	x	None		Minor		Moderate		Major		Replace		$0	
D4090 Other Fire Protection Systems	NOT USED			None		Minor		Moderate		Major		Replace			
D50 Electrical															
D5010 Electrical Service & Distribution		100%	x	None		Minor		Moderate		Major		Replace		$0	
D5020 Lighting and Branch Wiring		100%	x	None		Minor		Moderate		Major		Replace		$0	
D5030 Communications & Security	Voice / Data System	100%	x	None		Minor		Moderate		Major		Replace		$0	OK
	Clock / Intercom System	100%	x	None		Minor		Moderate		Major		Replace		$0	New
	Closed Circuit Surveillance	100%	x	None		Minor		Moderate		Major		Replace		$0	OK
	Access Control System	100%	x	None		Minor		Moderate		Major		Replace		$0	OK
	Intrusion Alarm System	100%	x	None		Minor		Moderate		Major		Replace		$0	Yes
	Fire Alarm / Detection	100%	x	None		Minor		Moderate		Major		Replace		$0	Yes
	Lighting Control System	100%	x	None		Minor		Moderate		Major		Replace		$0	OK
D5090 Other Electrical Systems	NOT USED			None		Minor		Moderate		Major		Replace			
E EQUIPMENT & FURNISHINGS															
E10 Equipment															
E1010 Commercial Equipment	Food Service		o	None		Minor		Moderate		Major		Replace		$0	
	Vocational		o	None		Minor		Moderate		Major		Replace		$0	
E1020 Institutional Equipment	Science		o	None		Minor		Moderate		Major		Replace		$0	
	Art		o	None		Minor		Moderate		Major		Replace		$0	
	Stage Performance		o	None		Minor		Moderate		Major		Replace		$0	Cost/SF of Stage Performance Area
	Restroom Accessories/Stalls	2%	x	None		Minor		Moderate	x	Major		Replace	50%	$278	
E1030 Vehicular Equipment	NOT USED			None		Minor		Moderate		Major		Replace			
E1090 Other Equipment	NOT USED			None		Minor		Moderate		Major		Replace			
E20 Furnishings															
E2010 Fixed Furnishings				None		Minor		Moderate		Major		Replace		$0	
E2020 Movable Furnishings				None		Minor		Moderate		Major		Replace		$0	
F SPECIAL CONSTRUCTION & DEMOLITION - NOT USED															
G BUILDING SITE WORK															
G10 Site Preparation	NOT USED														
G20 Site Improvements															
G2010 Roadways			o	None		Minor		Moderate		Major		Replace		$0	Cost/SF of surface area
G2020 Parking Lots		13622		None	x	Minor		Moderate		Major		Replace	100%	$24,381	Cost/SF of surface area
G2030 Pedestrian Paving		65	x	None		Minor		Moderate		Major		Replace		$0	Cost/SF of surface area
G2040 Site Development		1877		None		Minor		Moderate	x	Major		Replace	20%	$3,424	Cost/LF of fencing
G2050 Landscaping			o	None		Minor		Moderate		Major		Replace		$0	Cost/SF of irrigated area
G30 Site Mechanical Utilities															
G3010 Water Supply	Domestic	72	x	None		Minor		Moderate		Major		Replace		$0	Enter LF of pipe in cell E143
	Fire		o	None		Minor		Moderate		Major		Replace		$0	Enter LF of pipe in cell E144
G3020 Sanitary Sewer		72	x	None		Minor		Moderate		Major		Replace		$0	Enter LF of pipe in cell E145
G3030 Storm Sewer		72	x	None		Minor		Moderate		Major		Replace		$0	Enter SF of area to be drained

G3040 Heating Distribution			o	None	Minor	Moderate	Major	Replace		$0	Enter LF of pipe in cell E147
G3050 Cooling Distribution			o	None	Minor	Moderate	Major	Replace		$0	Enter LF of pipe in cell E148
G3060 Fuel Distribution		72	x	None	Minor	Moderate	Major	Replace		$0	Enter LF of pipe in cell E149
G3090 Other Site Mechanical Utilities	NOT USED			None	Minor	Moderate	Major	Replace			
G40 Site Electrical Utilities											
G4010 Electrical Distribution	Service	100%	x	None	Minor	Moderate	Major	Replace		$0	
	Generator		o	None	Minor	Moderate	Major	Replace		$0	
G4020 Site Lighting		50%	x	None	Minor	Moderate	Major	Replace		$0	
G4030 Site Communications & Security			o	None	Minor	Moderate	Major	Replace		$0	
G4090 Other Site Electrical Utilities	NOT USED			None	Minor	Moderate	Major	Replace			
G90 Other Site Construction	NOT USED										

OTHER

Description of System	Unit of Measure	Quantity	Unit Budget	Extended	Notes
				$0	
				$0	
				$0	
				$0	
				$0	
				$0	
				$0	

Physical Condition Budget Sub-Total	**$747,826**
Budgeted Development Costs	**$284,174**
Physical Condition Budget TOTAL	**$1,032,000**
Cost with Escalation to June 2021	**$1,176,480**
Cost with Escalation to June 2022	**$1,223,539**
Cost with Escalation to June 2023	**$1,272,480**
Replacement Budget	**$31,935,173**

Physical Condition Assessment

District Name: Gervais SD 1
Site Name: Gervais Elementary School
Building Name: Gervais Elementary K-2 Building
Building ID: 21370102

REMINDER: FILL OUT ALL INFORMATION ON '*BASE INFORMATION SHEET*' BEFORE ENTERING DATA ON THIS SHEET

An unused cell or system that should not receive direct user input

An automatically populated cell from user input elsewhere in the file - do not overwrite

Level 1	Level 2	Level 3	Type (as applicable)	% of Building or Number		None		Minor		Moderate		Major		Replace as part of Renovation	% of System or Finish	Automated Budget Estimate	Notes
					LEVEL OF ACTION												
A SUBSTRUCTURE																	
	A10 Foundations																
		A1010 Standard Foundations		100%	x	None		Minor		Moderate		Major		Replace	100%	$0	
		A1020 Special Foundations			o	None		Minor		Moderate		Major		Replace		$0	
		A1030 Slab on Grade			o	None		Minor		Moderate		Major		Replace		$0	
	A20 Basement Construction																
		A2010 Basement Excavation	NOT USED			None		Minor		Moderate		Major		Replace			
		A2020 Basement Walls		0%		None		Minor		Moderate		Major		Replace		$0	
B SHELL																	
	B10 Superstructure																
		B1010 Floor Construction	Wood	100%	x	None		Minor		Moderate		Major		Replace	100%	$0	
			Steel		o	None		Minor		Moderate		Major		Replace		$0	
			Concrete		o	None		Minor		Moderate		Major		Replace		$0	
		B1020 Roof Construction	Wood	100%	x	None		Minor		Moderate		Major		Replace	100%	$0	
			Steel		o	None		Minor		Moderate		Major		Replace		$0	
			Concrete		o	None		Minor		Moderate		Major		Replace		$0	
	B20 Exterior Enclosure																
		B2010 Exterior Walls	Concrete Formed / Tilt	0%	o	None		Minor		Moderate		Major		Replace		$0	
			Masonry	0%	o	None		Minor		Moderate		Major		Replace		$0	
			Framed w/ Wood Siding	100%	x	None		Minor		Moderate		Major		Replace	100%	$0	
			Framed w/Metal Panel		o	None		Minor		Moderate		Major		Replace		$0	
			Framed w/Stucco		o	None		Minor		Moderate		Major		Replace		$0	
			Framed w/Masonry Veneer		o	None		Minor		Moderate		Major		Replace		$0	
		B2020 Exterior Windows	Wood		o	None		Minor		Moderate		Major		Replace		$0	
			Aluminum/Steel			None		Minor		Moderate		Major		Replace		$0	
			Clad	100%	x	None		Minor		Moderate		Major		Replace	100%	$0	
			Curtain Wall		o	None		Minor		Moderate		Major		Replace		$0	
		B2030 Exterior Doors	Wood		o	None		Minor		Moderate		Major		Replace		$0	
			Hollow Metal	6	x	None		Minor		Moderate		Major		Replace	100%	$0	
			Storefront		o	None		Minor		Moderate		Major		Replace		$0	
	B30 Roofing																
		B3010 Roof Coverings	Asphalt Shingle	100%		None	x	Minor		Moderate		Major		Replace	5%	$941	
			Built-Up		o	None		Minor		Moderate		Major		Replace		$0	
			Single Ply		o	None		Minor		Moderate		Major		Replace		$0	
			Metal		o	None		Minor		Moderate		Major		Replace		$0	
			Concrete Tile		o	None		Minor		Moderate		Major		Replace		$0	
		B3020 Roof Openings	Skylights		o	None		Minor		Moderate		Major		Replace		$0	By Building GSF
			Access Hatch		o	None		Minor		Moderate		Major		Replace		$0	Per hatch
C INTERIORS																	
	C10 Interior Construction																
		C1010 Partitions	Framed	100%		None		Minor		Moderate		Major		Replace	100%	$0	

	Masonry		o	None		Minor		Moderate		Major		Replace		$0	
C1020 Interior Doors	Wood	20	x	None		Minor		Moderate		Major		Replace	100%	$0	
	Hollow Metal		o	None		Minor		Moderate		Major		Replace		$0	
C1030 Fittings	NOT USED			None		Minor		Moderate		Major		Replace			
C20 Stairs															
C2010 Stair Construction	Wood		o	None		Minor		Moderate		Major		Replace		$0	Cost/Flight
	Metal		o	None		Minor		Moderate		Major		Replace		$0	Cost/Flight
	Concrete		o	None		Minor		Moderate		Major		Replace		$0	Cost/Flight
C2020 Stair Finishes	Concrete Fill		o	None		Minor		Moderate		Major		Replace		$0	Cost/Flight
	Resilient		o	None		Minor		Moderate		Major		Replace		$0	Cost/Flight
C30 Interior Finishes															
C3010 Wall Finishes	Paint on Masonry		o	None		Minor		Moderate		Major		Replace		$0	
	Wallboard	95%		None	x	Minor		Moderate		Major		Replace	5%	$1,337	
	Wainscot	5%		None	x	Minor		Moderate		Major		Replace	5%	$70	
	Ceramic Tile		o	None		Minor		Moderate		Major		Replace		$0	
C3020 Floor Finishes	Carpet / Soft Surface	20%	x	None		Minor		Moderate		Major		Replace		$0	
	Resilient Tile	75%		None	x	Minor		Moderate		Major		Replace	5%	$528	
	Resilient Sheet	5%	x	None		Minor		Moderate		Major		Replace		$0	
	Polished Concrete		o	None		Minor		Moderate		Major		Replace		$0	
	Ceramic Tile		o	None		Minor		Moderate		Major		Replace		$0	
	Liquid Applied		o	None		Minor		Moderate		Major		Replace		$0	
	Wood Sports Floor		o	None		Minor		Moderate		Major		Replace		$0	
C3030 Ceiling Finishes	Wallboard		o	None		Minor		Moderate		Major		Replace		$0	
	Lay-In Ceiling Tile	100%		None	x	Minor		Moderate		Major		Replace	2%	$279	
	Glued-Up Ceiling Tile		o	None		Minor		Moderate		Major		Replace		$0	
	Painted Structure		o	None		Minor		Moderate		Major		Replace		$0	
D SERVICES															
D10 Conveying															
D1010 Elevators & Lifts			o	None		Minor		Moderate		Major		Replace		$0	
D1020 Escalators & Moving Walks			o	None		Minor		Moderate		Major		Replace		$0	
D1090 Other Conveying Systems			o	None		Minor		Moderate		Major		Replace		$0	
D20 Plumbing															
D2010 Plumbing Fixtures		10%	x	None		Minor		Moderate		Major		Replace	100%	$0	All (N) fixtures must meet ADA requirements by code.
D2020 Domestic Water Distribution		10%	x	None		Minor		Moderate		Major		Replace		$0	
D2030 Sanitary Waste		10%	x	None		Minor		Moderate		Major		Replace		$0	
D2040 Rain Water Drainage		100%	x	None		Minor		Moderate		Major		Replace		$0	
D2090 Other Plumbing Systems	NOT USED			None		Minor		Moderate		Major		Replace			
D30 HVAC															
D3010 Energy Supply		100%	x	None		Minor		Moderate		Major		Replace		$0	
D3020 Heat Generating Systems	Boiler		o	None		Minor		Moderate		Major		Replace		$0	
	Air Handler		o	None		Minor		Moderate		Major		Replace		$0	
	Furnace		o	None		Minor		Moderate		Major		Replace		$0	
	Heat Exchanger		o	None		Minor		Moderate		Major		Replace		$0	
D3030 Cooling Generating Systems	Component of air handler		o	None		Minor		Moderate		Major		Replace		$0	
	Stand alone chiller		o	None		Minor		Moderate		Major		Replace		$0	
D3040 Distribution Systems	Ductwork		o	None		Minor		Moderate		Major		Replace		$0	
	Hot water return & supply		o	None		Minor		Moderate		Major		Replace		$0	
D3050 Terminal & Package Units	Above ceiling VAV unit		o	None		Minor		Moderate		Major		Replace		$0	
	In-room ventilator unit	100%	x	None		Minor		Moderate		Major		Replace		$0	
	In-room radiant unit		o	None		Minor		Moderate		Major		Replace		$0	

D3060 Controls & Instrumentation		100%	x	None		Minor		Moderate		Major		Replace		$0	
D3070 Systems Testing & Balancing			o	None		Minor		Moderate		Major		Replace		$0	
D3090 Other HVAC Systems & Equipment	NOT USED			None		Minor		Moderate		Major		Replace			
D40 Fire Protection															
D4010 Sprinklers			o	None		Minor		Moderate		Major		Replace		$0	
D4020 Standpipes			o	None		Minor		Moderate		Major		Replace		$0	
D4030 Fire Protection Specialties			o	None		Minor		Moderate		Major		Replace		$0	
D4090 Other Fire Protection Systems	NOT USED			None		Minor		Moderate		Major		Replace			
D50 Electrical															
D5010 Electrical Service & Distribution		100%	x	None		Minor		Moderate		Major		Replace		$0	
D5020 Lighting and Branch Wiring		100%	x	None		Minor		Moderate		Major		Replace		$0	
D5030 Communications & Security	Voice / Data System	100%	x	None		Minor		Moderate		Major		Replace		$0	OK
	Clock / Intercom System	100%	x	None		Minor		Moderate		Major		Replace		$0	New
	Closed Circuit Surveillance	50%	x	None		Minor		Moderate		Major		Replace		$0	OK
	Access Control System	100%	x	None		Minor		Moderate		Major		Replace		$0	OK
	Intrusion Alarm System	100%	x	None		Minor		Moderate		Major		Replace		$0	Yes
	Fire Alarm / Detection	100%	x	None		Minor		Moderate		Major		Replace		$0	Yes
	Lighting Control System	100%		None		Minor		Moderate		Major		Replace		$0	OK - Lights are on sensors
D5090 Other Electrical Systems	NOT USED			None		Minor		Moderate		Major		Replace			
E EQUIPMENT & FURNISHINGS															
E10 Equipment															
E1010 Commercial Equipment	Food Service		o	None		Minor		Moderate		Major		Replace		$0	
	Vocational		o	None		Minor		Moderate		Major		Replace		$0	
E1020 Institutional Equipment	Science		o	None		Minor		Moderate		Major		Replace		$0	
	Art		o	None		Minor		Moderate		Major		Replace		$0	
	Stage Performance		o	None		Minor		Moderate		Major		Replace		$0	Cost/SF of Stage Performance Area
	Restroom Accessories/Stalls	7%	x	None		Minor		Moderate		Major		Replace		$0	
E1030 Vehicular Equipment	NOT USED			None		Minor		Moderate		Major		Replace			
E1090 Other Equipment	NOT USED			None		Minor		Moderate		Major		Replace			
E20 Furnishings															
E2010 Fixed Furnishings		5%		None	x	Minor		Moderate		Major		Replace	15%	$145	Countertops and backsplashes damaged and/or delaminating
E2020 Movable Furnishings		5%	x	None		Minor		Moderate		Major	x	Replace		$0	Built-in may be more appropriate
F SPECIAL CONSTRUCTION & DEMOLITION - NOT USED															
G BUILDING SITE WORK															
G10 Site Preparation	NOT USED														
G20 Site Improvements															
G2010 Roadways			o	None		Minor		Moderate		Major		Replace		$0	Cost/SF of surface area
G2020 Parking Lots			o	None		Minor		Moderate		Major		Replace		$0	Cost/SF of surface area
G2030 Pedestrian Paving		1380	x	None		Minor		Moderate		Major		Replace		$0	Cost/SF of surface area
G2040 Site Development			o	None		Minor		Moderate		Major		Replace		$0	Cost/LF of fencing
G2050 Landscaping			o	None		Minor		Moderate		Major		Replace		$0	Cost/SF of irrigated area
G30 Site Mechanical Utilities															
G3010 Water Supply	Domestic	40	x	None		Minor		Moderate		Major		Replace		$0	Enter LF of pipe in cell E143
	Fire		o	None		Minor		Moderate		Major		Replace		$0	Enter LF of pipe in cell E144
G3020 Sanitary Sewer		40	x	None		Minor		Moderate		Major		Replace		$0	Enter LF of pipe in cell E145
G3030 Storm Sewer		40	x	None		Minor		Moderate		Major		Replace		$0	Enter SF of area to be drained
G3040 Heating Distribution			o	None		Minor		Moderate		Major		Replace		$0	Enter LF of pipe in cell E147
G3050 Cooling Distribution			o	None		Minor		Moderate		Major		Replace		$0	Enter LF of pipe in cell E148

G3060 Fuel Distribution		40	x	None		Minor		Moderate		Major		Replace		$0	Enter LF of pipe in cell E149
G3090 Other Site Mechanical Utilities	NOT USED			None		Minor		Moderate		Major		Replace			
G40 Site Electrical Utilities															
G4010 Electrical Distribution	Service	40%	x	None		Minor		Moderate		Major		Replace		$0	
	Generator		o	None		Minor		Moderate		Major		Replace		$0	
G4020 Site Lighting		100%	x	None		Minor		Moderate		Major		Replace		$0	
G4030 Site Communications & Security			o	None		Minor		Moderate		Major		Replace		$0	
G4090 Other Site Electrical Utilities	NOT USED			None		Minor		Moderate		Major		Replace			
G90 Other Site Construction	NOT USED														

OTHER

Description of System	Unit of Measure	Quantity	Unit Budget	Extended	Notes
				$0	
				$0	
				$0	
				$0	
				$0	
				$0	
				$0	

Physical Condition Budget Sub-Total	**$3,300**
Budgeted Development Costs	**$1,254**
Physical Condition Budget TOTAL	**$4,554**
Cost with Escalation to June 2021	**$5,191**
Cost with Escalation to June 2022	**$5,399**
Cost with Escalation to June 2023	**$5,615**
Replacement Budget	**$6,250,009**

Physical Condition Assessment

District Name: Gervais SD 1
Site Name: Gervais Elementary School
Building Name: Gervais Elementary Gym/Cafeteria
Building ID: 21370101

REMINDER: FILL OUT ALL INFORMATION ON '*BASE INFORMATION SHEET*' BEFORE ENTERING DATA ON THIS SHEET
An unused cell or system that should not receive direct user input
An automatically populated cell from user input elsewhere in the file - do not overwrite

Level 1	Level 2	Level 3	Type (as applicable)	% of Building or Number		LEVEL OF ACTION: None		Minor		Moderate		Major		Replace as part of Renovation	% of System or Finish	Automated Budget Estimate	Notes
A SUBSTRUCTURE																	
	A10 Foundations																
		A1010 Standard Foundations		100%	x	None		Minor		Moderate		Major		Replace		$0	
		A1020 Special Foundations			o	None		Minor		Moderate		Major		Replace		$0	
		A1030 Slab on Grade		100%	x	None		Minor		Moderate		Major		Replace		$0	
	A20 Basement Construction																
		A2010 Basement Excavation	NOT USED			None		Minor		Moderate		Major		Replace			
		A2020 Basement Walls			o	None		Minor		Moderate		Major		Replace		$0	
B SHELL																	
	B10 Superstructure																
		B1010 Floor Construction	Wood		o	None		Minor		Moderate		Major		Replace		$0	
			Steel		o	None		Minor		Moderate		Major		Replace		$0	
			Concrete	100%	x	None		Minor		Moderate		Major		Replace		$0	
		B1020 Roof Construction	Wood	100%	x	None		Minor		Moderate		Major		Replace		$0	
			Steel		o	None		Minor		Moderate		Major		Replace		$0	
			Concrete		o	None		Minor		Moderate		Major		Replace		$0	
	B20 Exterior Enclosure																
		B2010 Exterior Walls	Concrete Formed / Tilt	35%	x	None		Minor		Moderate		Major		Replace		$0	
			Masonry	65%	x	None		Minor		Moderate		Major		Replace		$0	
			Framed w/ Wood Siding		o	None		Minor		Moderate		Major		Replace		$0	
			Framed w/Metal Panel		o	None		Minor		Moderate		Major		Replace		$0	
			Framed w/Stucco		o	None		Minor		Moderate		Major		Replace		$0	
			Framed w/Masonry Veneer		o	None		Minor		Moderate		Major		Replace		$0	
		B2020 Exterior Windows	Wood		o	None		Minor		Moderate		Major		Replace		$0	
			Aluminum/Steel	100%		None		Minor		Moderate		Major	x	Replace	100%	$228,000	
			Clad		o	None		Minor		Moderate		Major		Replace		$0	
			Curtain Wall		o	None		Minor		Moderate		Major		Replace		$0	
		B2030 Exterior Doors	Wood		o	None		Minor		Moderate		Major		Replace		$0	
			Hollow Metal	15		None		Minor		Moderate		Major	x	Replace	20%	$6,156	
			Storefront		o	None		Minor		Moderate		Major		Replace		$0	
	B30 Roofing																
		B3010 Roof Coverings	Asphalt Shingle		o	None		Minor		Moderate		Major		Replace		$0	
			Built-Up	100%		None	x	Minor		Moderate		Major		Replace	100%	$35,796	
			Single Ply		o	None		Minor		Moderate		Major		Replace		$0	
			Metal		o	None		Minor		Moderate		Major		Replace		$0	
			Concrete Tile		o	None		Minor		Moderate		Major		Replace		$0	
		B3020 Roof Openings	Skylights		o	None		Minor		Moderate		Major		Replace		$0	By Building GSF
			Access Hatch		o	None		Minor		Moderate		Major		Replace		$0	Per hatch
C INTERIORS																	
	C10 Interior Construction																
		C1010 Partitions	Framed	50%	x	None		Minor		Moderate		Major		Replace		$0	

		Masonry	50%	x	None		Minor		Moderate		Major		Replace		$0	
	C1020 Interior Doors	Wood	10	x	None		Minor		Moderate		Major		Replace		$0	
		Hollow Metal	25	x	None		Minor		Moderate		Major		Replace		$0	
	C1030 Fittings	NOT USED			None		Minor		Moderate		Major		Replace			
C20 Stairs																
	C2010 Stair Construction	Wood		o	None		Minor		Moderate		Major		Replace		$0	Cost/Flight
		Metal		o	None		Minor		Moderate		Major		Replace		$0	Cost/Flight
		Concrete		o	None		Minor		Moderate		Major		Replace		$0	Cost/Flight
	C2020 Stair Finishes	Concrete Fill		o	None		Minor		Moderate		Major		Replace		$0	Cost/Flight
		Resilient		o	None		Minor		Moderate		Major		Replace		$0	Cost/Flight
C30 Interior Finishes																
	C3010 Wall Finishes	Paint on Masonry	50%	x	None	x	Minor		Moderate		Major		Replace		$0	
		Wallboard	50%		None	x	Minor		Moderate		Major		Replace	30%	$6,908	
		Wainscot	5%		None		Minor		Moderate		Major	x	Replace	50%	$764	
		Ceramic Tile			None		Minor		Moderate		Major		Replace		$0	
	C3020 Floor Finishes	Carpet / Soft Surface	3%	x	None		Minor		Moderate		Major		Replace		$0	
		Resilient Tile	25%		None	x	Minor		Moderate		Major		Replace	50%	$2,879	
		Resilient Sheet	7%		None		Minor		Moderate		Major	x	Replace	100%	$19,152	
		Polished Concrete	20%		None	x	Minor		Moderate		Major		Replace	75%	$6,908	
		Ceramic Tile		o	None		Minor		Moderate		Major		Replace		$0	
		Liquid Applied		o	None		Minor		Moderate		Major		Replace		$0	
		Wood Sports Floor	45%		None		Minor		Moderate		Major		Replace		$0	
	C3030 Ceiling Finishes	Wallboard	47%		None		Minor		Moderate		Major		Replace		$0	
		Lay-In Ceiling Tile	20%		None	x	Minor		Moderate		Major		Replace	20%	$912	
		Glued-Up Ceiling Tile		o	None		Minor		Moderate		Major		Replace		$0	
		Painted Structure	33%	x	None		Minor		Moderate		Major		Replace		$0	
D SERVICES																
D10 Conveying																
	D1010 Elevators & Lifts			o	None		Minor		Moderate		Major		Replace		$0	
	D1020 Escalators & Moving Walks			o	None		Minor		Moderate		Major		Replace		$0	
	D1090 Other Conveying Systems			o	None		Minor		Moderate		Major		Replace		$0	
D20 Plumbing																
	D2010 Plumbing Fixtures		30%	x	None		Minor		Moderate		Major		Replace		$0	All (N) fixtures must meet ADA requirements by code. Approx. 41 fixtures
	D2020 Domestic Water Distribution		30%	x	None		Minor		Moderate		Major		Replace		$0	
	D2030 Sanitary Waste		30%	x	None		Minor		Moderate		Major		Replace		$0	
	D2040 Rain Water Drainage		100%	x	None		Minor		Moderate		Major		Replace		$0	
	D2090 Other Plumbing Systems	NOT USED			None		Minor		Moderate		Major		Replace			
D30 HVAC																
	D3010 Energy Supply		100%		None		Minor		Moderate		Major		Replace		$0	
	D3020 Heat Generating Systems	Boiler		o	None		Minor		Moderate		Major		Replace		$0	
		Air Handler		o	None		Minor		Moderate		Major		Replace		$0	
		Furnace	100%		None		Minor	x	Moderate		Major		Replace	100%	$30,552	
		Heat Exchanger		o	None		Minor		Moderate		Major		Replace		$0	
	D3030 Cooling Generating Systems	Component of air handler		o	None		Minor		Moderate		Major		Replace		$0	
		Stand alone chiller		o	None		Minor		Moderate		Major		Replace		$0	
	D3040 Distribution Systems	Ductwork	100%	x	None		Minor		Moderate		Major		Replace		$0	
		Hot water return & supply		o	None		Minor		Moderate		Major		Replace		$0	
	D3050 Terminal & Package Units	Above ceiling VAV unit		o	None		Minor		Moderate		Major		Replace		$0	
		In-room ventilator unit		o	None		Minor		Moderate		Major		Replace		$0	
		In-room radiant unit		o	None		Minor		Moderate		Major		Replace		$0	

D3060 Controls & Instrumentation		100%	x	None		Minor		Moderate		Major		Replace		$0	
D3070 Systems Testing & Balancing			o	None		Minor		Moderate		Major		Replace		$0	
D3090 Other HVAC Systems & Equipment	NOT USED			None		Minor		Moderate		Major		Replace			
D40 Fire Protection															
D4010 Sprinklers			o	None		Minor		Moderate		Major		Replace		$0	
D4020 Standpipes			o	None		Minor		Moderate		Major		Replace		$0	
D4030 Fire Protection Specialties		100%	x	None		Minor		Moderate		Major		Replace		$0	
D4090 Other Fire Protection Systems	NOT USED			None		Minor		Moderate		Major		Replace			
D50 Electrical															
D5010 Electrical Service & Distribution		100%	x	None		Minor		Moderate		Major		Replace		$0	
D5020 Lighting and Branch Wiring		100%	x	None		Minor		Moderate		Major		Replace		$0	New LED
D5030 Communications & Security	Voice / Data System	100%	x	None		Minor		Moderate		Major		Replace		$0	OK
	Clock / Intercom System	100%	x	None		Minor		Moderate		Major		Replace		$0	New
	Closed Circuit Surveillance	50%	x	None		Minor		Moderate		Major		Replace		$0	OK
	Access Control System	100%	x	None		Minor		Moderate		Major		Replace		$0	OK
	Intrusion Alarm System	100%	x	None		Minor		Moderate		Major		Replace		$0	Yes
	Fire Alarm / Detection	100%	x	None		Minor		Moderate		Major		Replace		$0	Yes
	Lighting Control System	100%	x	None		Minor		Moderate		Major		Replace		$0	OK - Lights have sensors
D5090 Other Electrical Systems	NOT USED			None		Minor		Moderate		Major		Replace			
E EQUIPMENT & FURNISHINGS															
E10 Equipment															
E1010 Commercial Equipment	Food Service	5%	x	None		Minor		Moderate		Major		Replace		$0	
	Vocational		o	None		Minor		Moderate		Major		Replace		$0	
E1020 Institutional Equipment	Science		o	None		Minor		Moderate		Major		Replace		$0	
	Art		o	None		Minor		Moderate		Major		Replace		$0	
	Stage Performance		o	None		Minor		Moderate		Major		Replace		$0	Cost/SF of Stage Performance Area
	Restroom Accessories/Stalls	20%		None		Minor		Moderate	x	Major		Replace	80%	$1,423	
E1030 Vehicular Equipment	NOT USED			None		Minor		Moderate		Major		Replace			
E1090 Other Equipment	NOT USED			None		Minor		Moderate		Major		Replace			
E20 Furnishings															
E2010 Fixed Furnishings		2%	x	None		Minor		Moderate		Major		Replace		$0	
E2020 Movable Furnishings			o	None		Minor		Moderate		Major		Replace		$0	
F SPECIAL CONSTRUCTION & DEMOLITION - NOT USED															
G BUILDING SITE WORK															
G10 Site Preparation	NOT USED														
G20 Site Improvements															
G2010 Roadways			o	None		Minor		Moderate		Major		Replace		$0	Cost/SF of surface area
G2020 Parking Lots			o	None		Minor		Moderate		Major		Replace		$0	Cost/SF of surface area
G2030 Pedestrian Paving			o	None		Minor		Moderate		Major		Replace		$0	Cost/SF of surface area
G2040 Site Development			o	None		Minor		Moderate		Major		Replace		$0	Cost/LF of fencing (Included in ES Main Bldg)
G2050 Landscaping			o	None		Minor		Moderate		Major		Replace		$0	Cost/SF of irrigated area
G30 Site Mechanical Utilities															
G3010 Water Supply	Domestic	120	x	None		Minor		Moderate		Major		Replace		$0	Enter LF of pipe in cell E143
	Fire		o	None		Minor		Moderate		Major		Replace		$0	Enter LF of pipe in cell E144
G3020 Sanitary Sewer		120	x	None		Minor		Moderate		Major		Replace		$0	Enter LF of pipe in cell E145
G3030 Storm Sewer		280	x	None		Minor		Moderate		Major		Replace		$0	Enter SF of area to be drained
G3040 Heating Distribution			o	None		Minor		Moderate		Major		Replace		$0	Enter LF of pipe in cell E147
G3050 Cooling Distribution			o	None		Minor		Moderate		Major		Replace		$0	Enter LF of pipe in cell E148
G3060 Fuel Distribution		120	x	None		Minor		Moderate		Major		Replace		$0	Enter LF of pipe in cell E149

G3090 Other Site Mechanical Utilities	NOT USED			None		Minor		Moderate		Major		Replace		
G40 Site Electrical Utilities														
G4010 Electrical Distribution	Service	100%	x	None		Minor		Moderate		Major		Replace		$0
	Generator		o	None		Minor		Moderate		Major		Replace		$0
G4020 Site Lighting		50%	x	None		Minor		Moderate		Major		Replace		$0
G4030 Site Communications & Security			o	None		Minor		Moderate		Major		Replace		$0
G4090 Other Site Electrical Utilities	NOT USED			None		Minor		Moderate		Major		Replace		
G90 Other Site Construction	NOT USED													

OTHER

Description of System	Unit of Measure	Quantity	Unit Budget	Extended	Notes
				$0	
				$0	
				$0	
				$0	
				$0	
				$0	
				$0	

Physical Condition Budget Sub-Total	**$339,450**
Budgeted Development Costs	**$128,991**
Physical Condition Budget TOTAL	**$468,441**
Cost with Escalation to June 2021	**$534,022**
Cost with Escalation to June 2022	**$555,383**
Cost with Escalation to June 2023	**$577,599**
Replacement Budget	**$13,529,520**

District Name: Gervais SD 1
Site Name: Gervais Elementary School
Building Name: Gervais Elementary Annex Classroom Building
Building ID: 21370103

REMINDER: FILL OUT ALL INFORMATION ON '*BASE INFORMATION SHEET*' BEFORE ENTERING DATA ON THIS SHEET

An unused cell or system that should not receive direct user input
An automatically populated cell from user input elsewhere in the file - do not overwrite

Level 1	Level 2	Level 3	Type (as applicable)	% of Building or Number	LEVEL OF ACTION: None	Minor	Moderate	Major	Replace as part of Renovation	% of System or Finish	Automated Budget Estimate	Notes
A SUBSTRUCTURE												
	A10 Foundations											
		A1010 Standard Foundations		100%		x				5%	$74	
		A1020 Special Foundations			o						$0	
		A1030 Slab on Grade		100%	x						$0	
	A20 Basement Construction											
		A2010 Basement Excavation	NOT USED									
		A2020 Basement Walls			o						$0	
B SHELL												
	B10 Superstructure											
		B1010 Floor Construction	Wood		o						$0	
			Steel		o						$0	
			Concrete		o						$0	
		B1020 Roof Construction	Wood	100%		x				10%	$0	Notable water damage in ceiling tile indicates roof structure damage
			Steel		o						$0	
			Concrete		o						$0	
	B20 Exterior Enclosure											
		B2010 Exterior Walls	Concrete Formed / Tilt		o						$0	
			Masonry		o						$0	
			Framed w/ Wood Siding	100%				x		20%	$3,465	
			Framed w/Metal Panel		o						$0	
			Framed w/Stucco		o						$0	
			Framed w/Masonry Veneer		o						$0	
		B2020 Exterior Windows	Wood		o						$0	
			Aluminum/Steel	100%				x		100%	$11,341	Some panes appeared to be plexiglass
			Clad		o						$0	
			Curtain Wall		o						$0	
		B2030 Exterior Doors	Wood	4		x				25%	$0	
			Hollow Metal		o						$0	
			Storefront		o						$0	
	B30 Roofing											
		B3010 Roof Coverings	Asphalt Shingle	100%					x	10%	$4,465	Notable water damage in ceiling tile indicates roof covering damage
			Built-Up		o						$0	
			Single Ply		o						$0	
			Metal		o						$0	
			Concrete Tile		o						$0	
		B3020 Roof Openings	Skylights		o						$0	By Building GSF
			Access Hatch		o						$0	Per hatch
C INTERIORS												
	C10 Interior Construction											
		C1010 Partitions	Framed	100%	X						$0	
			Masonry	0%	o						$0	
		C1020 Interior Doors	Wood	2	x						$0	
			Hollow Metal		o						$0	
		C1030 Fittings	NOT USED									

C20 Stairs													
C2010 Stair Construction	Wood		o	None		Minor		Moderate		Major		Replace		$0	Cost/Flight
	Metal		o	None		Minor		Moderate		Major		Replace		$0	Cost/Flight
	Concrete		o	None		Minor		Moderate		Major		Replace		$0	Cost/Flight
C2020 Stair Finishes	Concrete Fill		o	None		Minor		Moderate		Major		Replace		$0	Cost/Flight
	Resilient		o	None		Minor		Moderate		Major		Replace		$0	Cost/Flight
C30 Interior Finishes													
C3010 Wall Finishes	Paint on Masonry		o	None		Minor		Moderate		Major		Replace		$0	
	Wallboard	90%		None		Minor	x	Moderate		Major		Replace	30%	$1,977	
	Wainscot	10%		None		Minor		Moderate		Major	x	Replace	100%	$399	
	Ceramic Tile		o	None		Minor		Moderate		Major		Replace		$0	
C3020 Floor Finishes	Carpet / Soft Surface		o	None		Minor		Moderate		Major		Replace		$0	
	Resilient Tile	100%		None	x	Minor		Moderate		Major		Replace	5%	$150	
	Resilient Sheet		o	None		Minor		Moderate		Major		Replace		$0	
	Polished Concrete		o	None		Minor		Moderate		Major		Replace		$0	
	Ceramic Tile		o	None		Minor		Moderate		Major		Replace		$0	
	Liquid Applied		o	None		Minor		Moderate		Major		Replace		$0	
	Wood Sports Floor		o	None		Minor		Moderate		Major		Replace		$0	
C3030 Ceiling Finishes	Wallboard	12%		None		Minor		Moderate		Major		Replace		$0	
	Lay-In Ceiling Tile		o	None		Minor		Moderate		Major		Replace		$0	
	Glued-Up Ceiling Tile	88%		None		Minor		Moderate		Major	x	Replace	15%	$1,862	Notable water damage in ceiling tile indicates roof covering damage
	Painted Structure		o	None		Minor		Moderate		Major		Replace		$0	
D SERVICES													
D10 Conveying													
D1010 Elevators & Lifts			o	None		Minor		Moderate		Major		Replace		$0	
D1020 Escalators & Moving Walks			o	None		Minor		Moderate		Major		Replace		$0	
D1090 Other Conveying Systems			o	None		Minor		Moderate		Major		Replace		$0	
D20 Plumbing													
D2010 Plumbing Fixtures		5%	x	None		Minor		Moderate		Major		Replace		$0	All (N) fixtures must meet ADA requirements by code.
D2020 Domestic Water Distribution		5%	x	None		Minor		Moderate		Major		Replace		$0	
D2030 Sanitary Waste		5%	x	None		Minor		Moderate		Major		Replace		$0	
D2040 Rain Water Drainage		100%	x	None		Minor		Moderate		Major		Replace		$0	
D2090 Other Plumbing Systems	NOT USED			None		Minor		Moderate		Major		Replace			
D30 HVAC													
D3010 Energy Supply		100%	x	None		Minor		Moderate		Major		Replace		$0	
D3020 Heat Generating Systems	Boiler		o	None		Minor		Moderate		Major		Replace		$0	
	Air Handler		o	None		Minor		Moderate		Major		Replace		$0	
	Furnace		o	None		Minor		Moderate		Major		Replace		$0	
	Heat Exchanger		o	None		Minor		Moderate		Major		Replace		$0	
D3030 Cooling Generating Systems	Component of air handler		o	None		Minor		Moderate		Major		Replace		$0	
	Stand alone chiller		o	None		Minor		Moderate		Major		Replace		$0	
D3040 Distribution Systems	Ductwork		o	None		Minor		Moderate		Major		Replace		$0	
	Hot water return & supply		o	None		Minor		Moderate		Major		Replace		$0	
D3050 Terminal & Package Units	Above ceiling VAV unit		o	None		Minor		Moderate		Major		Replace		$0	
	In-room ventilator unit	100%	x	None		Minor		Moderate		Major		Replace		$0	capable of cooling
	In-room radiant unit		o	None		Minor		Moderate		Major		Replace		$0	
D3060 Controls & Instrumentation		100%	x	None		Minor		Moderate		Major		Replace		$0	
D3070 Systems Testing & Balancing			o	None		Minor		Moderate		Major		Replace		$0	
D3090 Other HVAC Systems & Equipment	NOT USED			None		Minor		Moderate		Major		Replace			
D40 Fire Protection													
D4010 Sprinklers		0%		None		Minor		Moderate		Major		Replace		$0	
D4020 Standpipes		0%		None		Minor		Moderate		Major		Replace		$0	
D4030 Fire Protection Specialties		0%		None		Minor		Moderate		Major		Replace		$0	
D4090 Other Fire Protection Systems	NOT USED			None		Minor		Moderate		Major		Replace			
D50 Electrical													

D5010 Electrical Service & Distribution		100%	x	None		Minor		Moderate		Major		Replace		$0	
D5020 Lighting and Branch Wiring		100%	x	None		Minor		Moderate		Major		Replace		$0	LED
D5030 Communications & Security	Voice / Data System	100%	x	None		Minor		Moderate		Major		Replace		$0	OK
	Clock / Intercom System	100%	x	None		Minor		Moderate		Major		Replace		$0	NEW
	Closed Circuit Surveillance	50%	x	None		Minor		Moderate		Major		Replace		$0	OK
	Access Control System	100%	x	None		Minor		Moderate		Major		Replace		$0	OK
	Intrusion Alarm System	100%	x	None		Minor		Moderate		Major		Replace		$0	Yes
	Fire Alarm / Detection	100%	x	None		Minor		Moderate		Major		Replace		$0	Yes
	Lighting Control System	100%	x	None		Minor		Moderate		Major		Replace		$0	Lights are on sensors
D5090 Other Electrical Systems	NOT USED			None		Minor		Moderate		Major		Replace			
E EQUIPMENT & FURNISHINGS															
E10 Equipment															
E1010 Commercial Equipment	Food Service		o	None		Minor		Moderate		Major		Replace		$0	
	Vocational		o	None		Minor		Moderate		Major		Replace		$0	
E1020 Institutional Equipment	Science		o	None		Minor		Moderate		Major		Replace		$0	
	Art		o	None		Minor		Moderate		Major		Replace		$0	
	Stage Performance		o	None		Minor		Moderate		Major		Replace		$0	Cost/SF of Stage Performance Area
	Restroom Accessories/Stalls		o	None		Minor		Moderate		Major		Replace		$0	
E1030 Vehicular Equipment	NOT USED			None		Minor		Moderate		Major		Replace			
E1090 Other Equipment	NOT USED			None		Minor		Moderate		Major		Replace			
E20 Furnishings															
E2010 Fixed Furnishings		5%		None	x	Minor		Moderate		Major		Replace	100%	$207	
E2020 Movable Furnishings		40%		None		Minor		Moderate		Major	x	Replace	20%	$5,715	Some furniture is residential products, and should be assessed for fire ratings, attachment to wall, and general safety.
F SPECIAL CONSTRUCTION & DEMOLITION - NOT USED															
G BUILDING SITE WORK															
G10 Site Preparation	NOT USED														
G20 Site Improvements															
G2010 Roadways			o	None		Minor		Moderate		Major		Replace		$0	Cost/SF of surface area
G2020 Parking Lots			o	None		Minor		Moderate		Major		Replace		$0	Cost/SF of surface area
G2030 Pedestrian Paving			o	None		Minor		Moderate		Major		Replace		$0	Cost/SF of surface area
G2040 Site Development			o	None		Minor		Moderate		Major		Replace		$0	Cost/LF of fencing
G2050 Landscaping			o	None		Minor		Moderate		Major		Replace		$0	Cost/SF of irrigated area
G30 Site Mechanical Utilities															
G3010 Water Supply	Domestic	70	x	None		Minor		Moderate		Major		Replace		$0	Enter LF of pipe in cell E143
	Fire		o	None		Minor		Moderate		Major		Replace		$0	Enter LF of pipe in cell E144
G3020 Sanitary Sewer		70	x	None		Minor		Moderate		Major		Replace		$0	Enter LF of pipe in cell E145
G3030 Storm Sewer			o	None		Minor		Moderate		Major		Replace		$0	Enter SF of area to be drained
G3040 Heating Distribution			o	None		Minor		Moderate		Major		Replace		$0	Enter LF of pipe in cell E147
G3050 Cooling Distribution			o	None		Minor		Moderate		Major		Replace		$0	Enter LF of pipe in cell E148
G3060 Fuel Distribution		70	x	None		Minor		Moderate		Major		Replace		$0	Enter LF of pipe in cell E149
G3090 Other Site Mechanical Utilities	NOT USED			None		Minor		Moderate		Major		Replace			
G40 Site Electrical Utilities															
G4010 Electrical Distribution	Service	100%	x	None		Minor		Moderate		Major		Replace		$0	
	Generator		o	None		Minor		Moderate		Major		Replace		$0	
G4020 Site Lighting		100%	x	None		Minor		Moderate		Major		Replace		$0	
G4030 Site Communications & Security			o	None		Minor		Moderate		Major		Replace		$0	
G4090 Other Site Electrical Utilities	NOT USED			None		Minor		Moderate		Major		Replace			
G90 Other Site Construction	NOT USED														

OTHER

Description of System	Unit of Measure	Quantity	Unit Budget	Extended	Notes
				$0	
				$0	

				$0	
				$0	
				$0	
				$0	
				$0	

Physical Condition Budget Sub-Total	**$29,655**
Budgeted Development Costs	**$11,269**
Physical Condition Budget TOTAL	**$40,924**
Cost with Escalation to June 2021	**$46,653**
Cost with Escalation to June 2022	**$48,519**
Cost with Escalation to June 2023	**$50,460**
Replacement Budget	**$1,334,978**

MIDDLE SCHOOL BUILDINGS

Base Information Sheet

Item	Data	Notes / Explanation
District Name:	Gervais SD 1	Pull-down menu of the 197 Districts
Site Name:	Gervais Middle School	Typically the name that is used for the facility / campus
Building Name:	Gervais Middle School	If only one building on site, refer to "main"
Building ID:	21370200	Please use the same ID that is assigned to this building in the annual Building Collection.
Building Type:	Middle School	Pull-down menu - feeds FCI calculation
Physical Address of Building:	300 E Douglas AVE	Informational only - does not link
Original Year of Building Completion	2013	When was the original building completed and ready for use
Original Construction Type		What type of construction was used to complete original building
Describe Other Construction Type		If you choose other construction type please describe here
County:	Marion	Pull-down menu of the 36 counties - sets location factor for budgets
Gross Square Footage:	12,224	Calculated from exterior face of walls (excluding eaves, outbuilding, porches, canopies, and similar)
Site Acreage:	2.71	District records

Assessor Company:	IBI Group	Certified company
Assessor Name:	Steve Winkle, Kate Barbaria	For follow up questions
Contact (Phone):	503-273-9192	
Contact (E-Mail):	steve.winkle@ibigroup.com	
Date of Assessment:	October 09-10, 2019	Might reference back for inflation calculation (future)

*Building ID Format: Located in ODE "Buildings Collection" database

Base Information Sheet

Item	Data	Notes / Explanation
District Name:	Gervais SD 1	Pull-down menu of the 197 Districts
Site Name:	Gervais Middle School	Typically the name that is used for the facility / campus
Building Name:	Gervais Middle School 8th Grade	If only one building on site, refer to "main"
Building ID:	21370202	Please use the same ID that is assigned to this building in the annual Building Collection.
Building Type:	Middle School	Pull-down menu - feeds FCI calculation
Physical Address of Building:	300 E Douglas AVE	Informational only - does not link
Original Year of Building Completion	1999	When was the original building completed and ready for use
Original Construction Type	Pre-fab wood frame	What type of construction was used to complete original building
Describe Other Construction Type		If you choose other construction type please describe here
County:	Marion	Pull-down menu of the 36 counties - sets location factor for budgets
Gross Square Footage:	3,800	Calculated from exterior face of walls (excluding eaves, outbuilding, porches, canopies, and similar)
Site Acreage:	Included with Main Building	District records
Assessor Company:	IBI Group	Certified company
Assessor Name:	Steve Winkle, Kate Barbaria	For follow up questions
Contact (Phone):	503-273-9192	
Contact (E-Mail):	steve.winkle@ibigroup.com	
Date of Assessment:	October 09-10, 2019	Might reference back for inflation calculation (future)

*Building ID Format: Located in ODE "Buildings Collection" database

Base Information Sheet

Item	Data	Notes / Explanation
District Name:	Gervais SD 1	Pull-down menu of the 197 Districts
Site Name:	Gervais Middle School	Typically the name that is used for the facility / campus
Building Name:	Gervais Middle School Exercise Room	If only one building on site, refer to "main"
Building ID:	21370201	Please use the same ID that is assigned to this building in the annual Building Collection.
Building Type:	Gymnasium Building	Pull-down menu - feeds FCI calculation
Physical Address of Building:	300 E Douglas AVE	Informational only - does not link
Original Year of Building Completion	2015	When was the original building completed and ready for use
Original Construction Type	Pre-Engineered Metal Building with Wood Frame Addition	What type of construction was used to complete original building
Describe Other Construction Type		If you choose other construction type please describe here
County:	Marion	Pull-down menu of the 36 counties - sets location factor for budgets
Gross Square Footage:	14,400	Calculated from exterior face of walls (excluding eaves, outbuilding, porches, canopies, and similar)
Site Acreage:	Included with Main Building	District records

Assessor Company:	IBI Group	Certified company
Assessor Name:	Steve Winkle, Kate Barbaria	For follow up questions
Contact (Phone):	503-273-9192	
Contact (E-Mail):	steve.winkle@ibigroup.com	
Date of Assessment:	October 09-10, 2019	Might reference back for inflation calculation (future)

*Building ID Format: Located in ODE "Buildings Collection" database

Physical Condition Assessment

District Name: Gervais SD 1
Site Name: Gervais Middle School
Building Name: Gervais Middle School
Building ID: 21370200

REMINDER: FILL OUT ALL INFORMATION ON '*BASE INFORMATION SHEET*' BEFORE ENTERING DATA ON THIS SHEET

An unused cell or system that should not receive direct user input

An automatically populated cell from user input elsewhere in the file - do not overwrite

Level 1	Level 2	Level 3	Type (as applicable)	% of Building or Number		LEVEL OF ACTION: None		Minor		Moderate		Major		Replace as part of Renovation	% of System or Finish	Automated Budget Estimate	Notes
A SUBSTRUCTURE																	
	A10 Foundations																
		A1010 Standard Foundations		100%	x	None		Minor		Moderate		Major		Replace		$0	
		A1020 Special Foundations			o	None		Minor		Moderate		Major		Replace		$0	
		A1030 Slab on Grade			0	None		Minor		Moderate		Major		Replace		$0	
	A20 Basement Construction																
		A2010 Basement Excavation	NOT USED			None		Minor		Moderate		Major		Replace			
		A2020 Basement Walls			o	None		Minor		Moderate		Major		Replace		$0	
B SHELL																	
	B10 Superstructure																
		B1010 Floor Construction	Wood	100%	x	None		Minor		Moderate		Major		Replace		$0	
			Steel		o	None		Minor		Moderate		Major		Replace		$0	
			Concrete		o	None		Minor		Moderate		Major		Replace		$0	
		B1020 Roof Construction	Wood	100%	x	None		Minor		Moderate		Major		Replace		$0	
			Steel		o	None		Minor		Moderate		Major		Replace		$0	
			Concrete		o	None		Minor		Moderate		Major		Replace		$0	
	B20 Exterior Enclosure																
		B2010 Exterior Walls	Concrete Formed / Tilt		o	None		Minor		Moderate		Major		Replace		$0	
			Masonry		o	None		Minor		Moderate		Major		Replace		$0	
			Framed w/ Wood Siding	100%		None		Minor	x	Moderate		Major		Replace	5%	$2,139	
			Framed w/Metal Panel		o	None		Minor		Moderate		Major		Replace		$0	
			Framed w/Stucco		o	None		Minor		Moderate		Major		Replace		$0	
			Framed w/Masonry Veneer		o	None		Minor		Moderate		Major		Replace		$0	
		B2020 Exterior Windows	Wood		o	None		Minor		Moderate		Major		Replace		$0	
			Aluminum/Steel		o	None		Minor		Moderate		Major		Replace		$0	
			Clad	100%	x	None		Minor		Moderate		Major		Replace		$0	vinyl windows
			Curtain Wall		o	None		Minor		Moderate		Major		Replace		$0	
		B2030 Exterior Doors	Wood		o	None		Minor		Moderate		Major		Replace		$0	
			Hollow Metal	6	x	None		Minor		Moderate		Major		Replace		$0	
			Storefront		o	None		Minor		Moderate		Major		Replace		$0	
	B30 Roofing																
		B3010 Roof Coverings	Asphalt Shingle	100%		None	x	Minor		Moderate		Major		Replace	5%	$941	
			Built-Up		o	None		Minor		Moderate		Major		Replace		$0	
			Single Ply		o	None		Minor		Moderate		Major		Replace		$0	
			Metal		o	None		Minor		Moderate		Major		Replace		$0	
			Concrete Tile		o	None		Minor		Moderate		Major		Replace		$0	
		B3020 Roof Openings	Skylights		o	None		Minor		Moderate		Major		Replace		$0	By Building GSF
			Access Hatch		o	None		Minor		Moderate		Major		Replace		$0	Per hatch
C INTERIORS																	
	C10 Interior Construction																
		C1010 Partitions	Framed	100%	x	None		Minor		Moderate		Major		Replace		$0	

	Masonry		o	None		Minor		Moderate		Major		Replace		$0	
C1020 Interior Doors	Wood	20	x	None		Minor		Moderate		Major		Replace		$0	Doors panels have minor damage to finishes
	Hollow Metal		o	None		Minor		Moderate		Major		Replace		$0	
C1030 Fittings	NOT USED			None		Minor		Moderate		Major		Replace			
C20 Stairs															
C2010 Stair Construction	Wood		o	None		Minor		Moderate		Major		Replace		$0	Cost/Flight
	Metal		o	None		Minor		Moderate		Major		Replace		$0	Cost/Flight
	Concrete		o	None		Minor		Moderate		Major		Replace		$0	Cost/Flight
C2020 Stair Finishes	Concrete Fill		o	None		Minor		Moderate		Major		Replace		$0	Cost/Flight
	Resilient		o	None		Minor		Moderate		Major		Replace		$0	Cost/Flight
C30 Interior Finishes															
C3010 Wall Finishes	Paint on Masonry		o	None		Minor		Moderate		Major		Replace		$0	
	Wallboard	95%		None	x	Minor		Moderate		Major		Replace	5%	$1,337	
	Wainscot	5%		None	x	Minor		Moderate		Major		Replace	100%	$1,407	
	Ceramic Tile		o	None		Minor		Moderate		Major		Replace		$0	
C3020 Floor Finishes	Carpet / Soft Surface	2%	x	None		Minor		Moderate		Major		Replace		$0	
	Resilient Tile	90%	x	None		Minor		Moderate		Major		Replace		$0	
	Resilient Sheet	8%	x	None		Minor		Moderate		Major		Replace		$0	
	Polished Concrete		o	None		Minor		Moderate		Major		Replace		$0	
	Ceramic Tile		o	None		Minor		Moderate		Major		Replace		$0	
	Liquid Applied		o	None		Minor		Moderate		Major		Replace		$0	
	Wood Sports Floor		o	None		Minor		Moderate		Major		Replace		$0	
C3030 Ceiling Finishes	Wallboard		o	None		Minor		Moderate		Major		Replace		$0	
	Lay-In Ceiling Tile	100%		None	x	Minor		Moderate		Major		Replace	5%	$697	Minor staining at vents in restrooms could be indicative of additional mechanical or roofing repairs
	Glued-Up Ceiling Tile		o	None		Minor		Moderate		Major		Replace		$0	
	Painted Structure		o	None		Minor		Moderate		Major		Replace		$0	
D SERVICES															
D10 Conveying															
D1010 Elevators & Lifts		0		None		Minor		Moderate		Major		Replace		$0	
D1020 Escalators & Moving Walks		0		None		Minor		Moderate		Major		Replace		$0	
D1090 Other Conveying Systems		0		None		Minor		Moderate		Major		Replace		$0	
D20 Plumbing															
D2010 Plumbing Fixtures		10%	x	None		Minor		Moderate		Major		Replace	100%	$0	All (N) fixtures must meet ADA requirements by code.
D2020 Domestic Water Distribution		10%	x	None		Minor		Moderate		Major		Replace		$0	
D2030 Sanitary Waste		10%	x	None		Minor		Moderate		Major		Replace		$0	
D2040 Rain Water Drainage		100%	x	None		Minor		Moderate		Major		Replace		$0	
D2090 Other Plumbing Systems	NOT USED			None		Minor		Moderate		Major		Replace			
D30 HVAC															
D3010 Energy Supply		100%	x	None		Minor		Moderate		Major		Replace		$0	
D3020 Heat Generating Systems	Boiler		o	None		Minor		Moderate		Major		Replace		$0	
	Air Handler		o	None		Minor		Moderate		Major		Replace		$0	
	Furnace		o	None		Minor		Moderate		Major		Replace		$0	
	Heat Exchanger		o	None		Minor		Moderate		Major		Replace		$0	
D3030 Cooling Generating Systems	Component of air handler	100%	x	None		Minor		Moderate		Major		Replace		$0	
	Stand alone chiller		o	None		Minor		Moderate		Major		Replace		$0	
D3040 Distribution Systems	Ductwork		o	None		Minor		Moderate		Major		Replace		$0	
	Hot water return & supply		o	None		Minor		Moderate		Major		Replace		$0	

D3050 Terminal & Package Units	Above ceiling VAV unit		o	None		Minor		Moderate		Major		Replace		$0	
	In-room ventilator unit	100%	x	None		Minor		Moderate		Major		Replace		$0	
	In-room radiant unit			None		Minor		Moderate		Major		Replace		$0	
D3060 Controls & Instrumentation		100%	x	None		Minor		Moderate		Major		Replace		$0	
D3070 Systems Testing & Balancing		100%	x	None		Minor		Moderate		Major		Replace		$0	
D3090 Other HVAC Systems & Equipment	NOT USED			None		Minor		Moderate		Major		Replace			
D40 Fire Protection															
D4010 Sprinklers			o	None		Minor		Moderate		Major		Replace		$0	
D4020 Standpipes			o	None		Minor		Moderate		Major		Replace		$0	
D4030 Fire Protection Specialties			o	None		Minor		Moderate		Major		Replace		$0	
D4090 Other Fire Protection Systems	NOT USED			None		Minor		Moderate		Major		Replace			
D50 Electrical															
D5010 Electrical Service & Distribution		100%	x	None		Minor		Moderate		Major		Replace		$0	
D5020 Lighting and Branch Wiring		100%	x	None		Minor		Moderate		Major		Replace		$0	
D5030 Communications & Security	Voice / Data System	100%	x	None		Minor		Moderate		Major		Replace		$0	OK
	Clock / Intercom System	100%	x	None		Minor		Moderate		Major		Replace		$0	OK
	Closed Circuit Surveillance	100%	x	None		Minor		Moderate		Major		Replace		$0	OK
	Access Control System	100%	x	None		Minor		Moderate		Major		Replace		$0	OK
	Intrusion Alarm System		o	None		Minor		Moderate		Major		Replace		$0	No
	Fire Alarm / Detection	100%	x	None		Minor		Moderate		Major		Replace		$0	OK
	Lighting Control System	100%	x	None		Minor		Moderate		Major		Replace		$0	OK - lights on sensors
D5090 Other Electrical Systems	NOT USED			None		Minor		Moderate		Major		Replace			
E EQUIPMENT & FURNISHINGS															
E10 Equipment															
E1010 Commercial Equipment	Food Service		o	None		Minor		Moderate		Major		Replace		$0	
	Vocational		o	None		Minor		Moderate		Major		Replace		$0	
E1020 Institutional Equipment	Science		o	None		Minor		Moderate		Major		Replace		$0	
	Art		o	None		Minor		Moderate		Major		Replace		$0	
	Stage Performance		o	None		Minor		Moderate		Major		Replace		$0	Cost/SF of Stage Performance Area
	Restroom Accessories/Stalls	7%		None	x	Minor		Moderate		Major		Replace	100%	$215	
E1030 Vehicular Equipment	NOT USED			None		Minor		Moderate		Major		Replace			
E1090 Other Equipment	NOT USED			None		Minor		Moderate		Major		Replace			
E20 Furnishings															
E2010 Fixed Furnishings		2%		None		Minor	x	Moderate		Major		Replace	20%	$131	Countertops and backsplashes damaged and/or delaminating
E2020 Movable Furnishings		30%	x	None		Minor		Moderate		Major		Replace	100%	$0	
F SPECIAL CONSTRUCTION & DEMOLITION - NOT USED															
G BUILDING SITE WORK															
G10 Site Preparation	NOT USED														
G20 Site Improvements															
G2010 Roadways		3000		None	x	Minor		Moderate		Major		Replace	100%	$5,369	Cost/SF of surface area
G2020 Parking Lots		12000		None		Minor		Moderate		Major	x	Replace	100%	$109,440	Cost/SF of surface area
G2030 Pedestrian Paving		5400	x	None		Minor		Moderate		Major		Replace		$0	Cost/SF of surface area
G2040 Site Development			o	None		Minor		Moderate		Major		Replace		$0	Cost/LF of fencing
G2050 Landscaping			o	None		Minor		Moderate		Major		Replace		$0	Cost/SF of irrigated area
G30 Site Mechanical Utilities															
G3010 Water Supply	Domestic	250	x	None		Minor		Moderate		Major		Replace		$0	Enter LF of pipe in cell E143
	Fire		o	None		Minor		Moderate		Major		Replace		$0	Enter LF of pipe in cell E144
G3020 Sanitary Sewer		250	x	None		Minor		Moderate		Major		Replace		$0	Enter LF of pipe in cell E145

G3030 Storm Sewer		250	x	None	Minor	Moderate	Major	Replace		$0	Enter SF of area to be drained
G3040 Heating Distribution			o	None	Minor	Moderate	Major	Replace		$0	Enter LF of pipe in cell E147
G3050 Cooling Distribution			o	None	Minor	Moderate	Major	Replace		$0	Enter LF of pipe in cell E148
G3060 Fuel Distribution		250	x	None	Minor	Moderate	Major	Replace		$0	Enter LF of pipe in cell E149
G3090 Other Site Mechanical Utilities	NOT USED			None	Minor	Moderate	Major	Replace			
G40 Site Electrical Utilities											
G4010 Electrical Distribution	Service	100%	x	None	Minor	Moderate	Major	Replace		$0	
	Generator		o	None	Minor	Moderate	Major	Replace		$0	
G4020 Site Lighting		100%	x	None	Minor	Moderate	Major	Replace		$0	
G4030 Site Communications & Security		50%	x	None	Minor	Moderate	Major	Replace		$0	
G4090 Other Site Electrical Utilities	NOT USED			None	Minor	Moderate	Major	Replace			
G90 Other Site Construction	NOT USED										

OTHER

Description of System	Unit of Measure	Quantity	Unit Budget	Extended	Notes
				$0	
				$0	
				$0	
				$0	
				$0	
				$0	
				$0	

Physical Condition Budget Sub-Total	**$121,676**
Budgeted Development Costs	**$46,237**
Physical Condition Budget TOTAL	**$167,913**
Cost with Escalation to June 2021	**$191,421**
Cost with Escalation to June 2022	**$199,078**
Cost with Escalation to June 2023	**$207,041**
Replacement Budget	**$6,538,471**

Physical Condition Assessment

District Name: Gervais SD 1
Site Name: Gervais Middle School
Building Name: Gervais Middle School 8th Grade
Building ID: 21370202

REMINDER: FILL OUT ALL INFORMATION ON '*BASE INFORMATION SHEET*' BEFORE ENTERING DATA ON THIS SHEET

An unused cell or system that should not receive direct user input

An automatically populated cell from user input elsewhere in the file - do not overwrite

Level 1	Level 2	Level 3	Type (as applicable)	% of Building or Number		LEVEL OF ACTION: None		Minor		Moderate		Major		Replace as part of Renovation	% of System or Finish	Automated Budget Estimate	Notes
A SUBSTRUCTURE																	
	A10 Foundations																
		A1010 Standard Foundations		100%	x	None		Minor		Moderate		Major		Replace		$0	
		A1020 Special Foundations			o	None		Minor		Moderate		Major		Replace		$0	
		A1030 Slab on Grade			o	None		Minor		Moderate		Major		Replace		$0	Covered center walkway included with paving
	A20 Basement Construction																
		A2010 Basement Excavation	NOT USED			None		Minor		Moderate		Major		Replace			
		A2020 Basement Walls			o	None		Minor		Moderate		Major		Replace		$0	
B SHELL																	
	B10 Superstructure																
		B1010 Floor Construction	Wood	100%	x	None		Minor		Moderate		Major		Replace		$0	
			Steel		o	None		Minor		Moderate		Major		Replace		$0	
			Concrete		o	None		Minor		Moderate		Major		Replace		$0	
		B1020 Roof Construction	Wood	100%	x	None		Minor		Moderate		Major		Replace		$0	
			Steel		o	None		Minor		Moderate		Major		Replace		$0	
			Concrete		o	None		Minor		Moderate		Major		Replace		$0	
	B20 Exterior Enclosure																
		B2010 Exterior Walls	Concrete Formed / Tilt		o	None		Minor		Moderate		Major		Replace		$0	
			Masonry		o	None		Minor		Moderate		Major		Replace		$0	
			Framed w/ Wood Siding	100%	x	None		Minor		Moderate		Major		Replace		$0	
			Framed w/Metal Panel		o	None		Minor		Moderate		Major		Replace		$0	
			Framed w/Stucco		o	None		Minor		Moderate		Major		Replace		$0	
			Framed w/Masonry Veneer		o	None		Minor		Moderate		Major		Replace		$0	
		B2020 Exterior Windows	Wood		o	None		Minor		Moderate		Major		Replace		$0	
			Aluminum/Steel	100%	x	None		Minor		Moderate		Major		Replace		$0	
			Clad		o	None		Minor		Moderate		Major		Replace		$0	
			Curtain Wall		o	None		Minor		Moderate		Major		Replace		$0	
		B2030 Exterior Doors	Wood		o	None		Minor		Moderate		Major		Replace		$0	
			Hollow Metal	4	x	None		Minor		Moderate		Major		Replace		$0	
			Storefront		o	None		Minor		Moderate		Major		Replace		$0	
	B30 Roofing																
		B3010 Roof Coverings	Asphalt Shingle	100%		None	x	Minor		Moderate		Major		Replace	20%	$1,170	
			Built-Up		o	None		Minor		Moderate		Major		Replace		$0	
			Single Ply		o	None		Minor		Moderate		Major		Replace		$0	
			Metal		o	None		Minor		Moderate		Major		Replace		$0	
			Concrete Tile		o	None		Minor		Moderate		Major		Replace		$0	
		B3020 Roof Openings	Skylights		o	None		Minor		Moderate		Major		Replace		$0	By Building GSF
			Access Hatch		o	None		Minor		Moderate		Major		Replace		$0	Per hatch
C INTERIORS																	
	C10 Interior Construction																

C1010 Partitions	Framed	100%	x	None		Minor		Moderate		Major		Replace		$0	
	Masonry		o	None		Minor		Moderate		Major		Replace		$0	
C1020 Interior Doors	Wood	2	x	None		Minor		Moderate		Major		Replace		$0	
	Hollow Metal		o	None		Minor		Moderate		Major		Replace		$0	
C1030 Fittings	NOT USED			None		Minor		Moderate		Major		Replace			
C20 Stairs															
C2010 Stair Construction	Wood		o	None		Minor		Moderate		Major		Replace		$0	Cost/Flight
	Metal		o	None		Minor		Moderate		Major		Replace		$0	Cost/Flight
	Concrete		o	None		Minor		Moderate		Major		Replace		$0	Cost/Flight
C2020 Stair Finishes	Concrete Fill		o	None		Minor		Moderate		Major		Replace		$0	Cost/Flight
	Resilient		o	None		Minor		Moderate		Major		Replace		$0	Cost/Flight
C30 Interior Finishes															
C3010 Wall Finishes	Paint on Masonry		o	None		Minor		Moderate		Major		Replace		$0	
	Wallboard	100%	x	None		Minor		Moderate		Major		Replace		$0	
	Wainscot		o	None		Minor		Moderate		Major		Replace		$0	
	Ceramic Tile		o	None		Minor		Moderate		Major		Replace		$0	
C3020 Floor Finishes	Carpet / Soft Surface	100%		None		Minor		Moderate		Major	x	Replace	100%	$28,938	Carpet is not too bad but could be replaced soon
	Resilient Tile		o	None		Minor		Moderate		Major		Replace		$0	
	Resilient Sheet		o	None		Minor		Moderate		Major		Replace		$0	
	Polished Concrete		o	None		Minor		Moderate		Major		Replace		$0	
	Ceramic Tile		o	None		Minor		Moderate		Major		Replace		$0	
	Liquid Applied		o	None		Minor		Moderate		Major		Replace		$0	
	Wood Sports Floor		o	None		Minor		Moderate		Major		Replace		$0	
C3030 Ceiling Finishes	Wallboard		o	None		Minor		Moderate		Major		Replace		$0	
	Lay-In Ceiling Tile	100%		None	x	Minor		Moderate		Major		Replace	25%	$1,083	
	Glued-Up Ceiling Tile		o	None		Minor		Moderate		Major		Replace		$0	
	Painted Structure		o	None		Minor		Moderate		Major		Replace		$0	
D SERVICES															
D10 Conveying															
D1010 Elevators & Lifts			o	None		Minor		Moderate		Major		Replace		$0	
D1020 Escalators & Moving Walks			o	None		Minor		Moderate		Major		Replace		$0	
D1090 Other Conveying Systems			o	None		Minor		Moderate		Major		Replace		$0	
D20 Plumbing															
D2010 Plumbing Fixtures		5%	x	None		Minor		Moderate		Major		Replace		$0	All (N) fixtures must meet ADA requirements by code.
D2020 Domestic Water Distribution		5%	x	None		Minor		Moderate		Major		Replace		$0	
D2030 Sanitary Waste		5%	x	None		Minor		Moderate		Major		Replace		$0	
D2040 Rain Water Drainage		100%	x	None		Minor		Moderate		Major		Replace		$0	
D2090 Other Plumbing Systems	NOT USED			None		Minor		Moderate		Major		Replace			
D30 HVAC															
D3010 Energy Supply		100%	x	None		Minor		Moderate		Major		Replace		$0	
D3020 Heat Generating Systems	Boiler		o	None		Minor		Moderate		Major		Replace		$0	
	Air Handler		o	None		Minor		Moderate		Major		Replace		$0	
	Furnace		o	None		Minor		Moderate		Major		Replace		$0	
	Heat Exchanger		o	None		Minor		Moderate		Major		Replace		$0	
D3030 Cooling Generating Systems	Component of air handler	100%	x	None		Minor		Moderate		Major		Replace		$0	
	Stand alone chiller		o	None		Minor		Moderate		Major		Replace		$0	
D3040 Distribution Systems	Ductwork		o	None		Minor		Moderate		Major		Replace		$0	
	Hot water return & supply		o	None		Minor		Moderate		Major		Replace		$0	
D3050 Terminal & Package Units	Above ceiling VAV unit		o	None		Minor		Moderate		Major		Replace		$0	

	In-room ventilator unit	100%	x	None		Minor		Moderate		Major		Replace		$0	
	In-room radiant unit		o	None		Minor		Moderate		Major		Replace		$0	
D3060 Controls & Instrumentation		100%	x	None		Minor		Moderate		Major		Replace		$0	
D3070 Systems Testing & Balancing		100%	x	None		Minor		Moderate		Major		Replace		$0	
D3090 Other HVAC Systems & Equipment	NOT USED			None		Minor		Moderate		Major		Replace			
D40 Fire Protection															
D4010 Sprinklers			o	None		Minor		Moderate		Major		Replace		$0	
D4020 Standpipes			o	None		Minor		Moderate		Major		Replace		$0	
D4030 Fire Protection Specialties			o	None		Minor		Moderate		Major		Replace		$0	
D4090 Other Fire Protection Systems	NOT USED			None		Minor		Moderate		Major		Replace			
D50 Electrical															
D5010 Electrical Service & Distribution		100%	x	None		Minor		Moderate		Major		Replace		$0	
D5020 Lighting and Branch Wiring		100%	x	None		Minor		Moderate		Major		Replace		$0	LED?
D5030 Communications & Security	Voice / Data System	100%	x	None		Minor		Moderate		Major		Replace		$0	OK
	Clock / Intercom System	100%	x	None		Minor		Moderate		Major		Replace		$0	New
	Closed Circuit Surveillance	100%	x	None		Minor		Moderate		Major		Replace		$0	OK
	Access Control System		o	None		Minor		Moderate		Major		Replace		$0	
	Intrusion Alarm System	100%	x	None		Minor		Moderate		Major		Replace		$0	Yes
	Fire Alarm / Detection	100%	x	None		Minor		Moderate		Major		Replace		$0	Yes
	Lighting Control System	100%	x	None		Minor		Moderate		Major		Replace		$0	Ok
D5090 Other Electrical Systems	NOT USED			None		Minor		Moderate		Major		Replace			
E EQUIPMENT & FURNISHINGS															
E10 Equipment															
E1010 Commercial Equipment	Food Service		o	None		Minor		Moderate		Major		Replace		$0	
	Vocational		o	None		Minor		Moderate		Major		Replace		$0	
E1020 Institutional Equipment	Science	3500		None		Minor		Moderate		Major	x	Replace	100%	$15,800	Science table equipment could be upgraded
	Art		o	None		Minor		Moderate		Major		Replace		$0	
	Stage Performance		o	None		Minor		Moderate		Major		Replace		$0	Cost/SF of Stage Performance Area
	Restroom Accessories/Stalls		o	None		Minor		Moderate		Major		Replace		$0	
E1030 Vehicular Equipment	NOT USED			None		Minor		Moderate		Major		Replace			
E1090 Other Equipment	NOT USED			None		Minor		Moderate		Major		Replace			
E20 Furnishings															
E2010 Fixed Furnishings		3%		None		Minor	x	Moderate		Major		Replace	100%	$305	Includes lockers
E2020 Movable Furnishings		6%	x	None		Minor		Moderate		Major		Replace		$0	
F SPECIAL CONSTRUCTION & DEMOLITION - NOT USED															
G BUILDING SITE WORK															
G10 Site Preparation	NOT USED														
G20 Site Improvements															
G2010 Roadways			o	None		Minor		Moderate		Major		Replace		$0	Cost/SF of surface area
G2020 Parking Lots			o	None		Minor		Moderate		Major		Replace		$0	Cost/SF of surface area
G2030 Pedestrian Paving		410	x	None		Minor		Moderate		Major		Replace		$0	Cost/SF of surface area Covered area between classrooms
G2040 Site Development			o	None		Minor		Moderate		Major		Replace		$0	Cost/LF of fencing
G2050 Landscaping			0	None		Minor		Moderate		Major		Replace		$0	Cost/SF of irrigated area
G30 Site Mechanical Utilities															
G3010 Water Supply	Domestic	320	x	None		Minor		Moderate		Major		Replace		$0	Enter LF of pipe in cell E143
	Fire		o	None		Minor		Moderate		Major		Replace		$0	Enter LF of pipe in cell E144
G3020 Sanitary Sewer		320	x	None		Minor		Moderate		Major		Replace		$0	Enter LF of pipe in cell E145

G3030 Storm Sewer			o	None	Minor	Moderate	Major	Replace		$0	Enter SF of area to be drained
G3040 Heating Distribution			o	None	Minor	Moderate	Major	Replace		$0	Enter LF of pipe in cell E147
G3050 Cooling Distribution			o	None	Minor	Moderate	Major	Replace		$0	Enter LF of pipe in cell E148
G3060 Fuel Distribution		320	x	None	Minor	Moderate	Major	Replace		$0	Enter LF of pipe in cell E149
G3090 Other Site Mechanical Utilities	NOT USED			None	Minor	Moderate	Major	Replace			
G40 Site Electrical Utilities											
G4010 Electrical Distribution	Service	100%	x	None	Minor	Moderate	Major	Replace		$0	
	Generator		o	None	Minor	Moderate	Major	Replace		$0	
G4020 Site Lighting		100%	x	None	Minor	Moderate	Major	Replace		$0	
G4030 Site Communications & Security		100%	x	None	Minor	Moderate	Major	Replace		$0	
G4090 Other Site Electrical Utilities	NOT USED			None	Minor	Moderate	Major	Replace			
G90 Other Site Construction	NOT USED										

OTHER

Description of System	Unit of Measure	Quantity	Unit Budget	Extended	Notes
				$0	
				$0	
				$0	
				$0	
				$0	
				$0	
				$0	

Physical Condition Budget Sub-Total	**$47,296**
Budgeted Development Costs	**$17,973**
Physical Condition Budget TOTAL	**$65,269**
Cost with Escalation to June 2021	**$74,406**
Cost with Escalation to June 2022	**$77,383**
Cost with Escalation to June 2023	**$80,478**
Replacement Budget	**$2,032,574**

District Name: Gervais SD 1
Site Name: Gervais Middle School
Building Name: Gervais Middle School Exercise Room
Building ID: 21370201

REMINDER: FILL OUT ALL INFORMATION ON '*BASE INFORMATION SHEET*' BEFORE ENTERING DATA ON THIS SHEET

An unused cell or system that should not receive direct user input

An automatically populated cell from user input elsewhere in the file - do not overwrite

Level 1	Level 2	Level 3	Type (as applicable)	% of Building or Number		LEVEL OF ACTION: None		Minor		Moderate		Major		Replace as part of Renovation	% of System or Finish	Automated Budget Estimate	Notes
A SUBSTRUCTURE																	
	A10 Foundations																
		A1010 Standard Foundations		100%	x	None		Minor		Moderate		Major		Replace		$0	
		A1020 Special Foundations			o	None		Minor		Moderate		Major		Replace		$0	
		A1030 Slab on Grade		87%	x	None		Minor		Moderate		Major		Replace		$0	
	A20 Basement Construction																
		A2010 Basement Excavation	NOT USED			None		Minor		Moderate		Major		Replace			
		A2020 Basement Walls			o	None		Minor		Moderate		Major		Replace		$0	
B SHELL																	
	B10 Superstructure																
		B1010 Floor Construction	Wood	13%	x	None		Minor		Moderate		Major		Replace		$0	
			Steel		o	None		Minor		Moderate		Major		Replace		$0	
			Concrete		o	None		Minor		Moderate		Major		Replace		$0	
		B1020 Roof Construction	Wood	13%	x	None		Minor		Moderate		Major		Replace		$0	
			Steel	87%	x	None		Minor		Moderate		Major		Replace		$0	
			Concrete		o	None		Minor		Moderate		Major		Replace		$0	
	B20 Exterior Enclosure																
		B2010 Exterior Walls	Concrete Formed / Tilt		o	None		Minor		Moderate		Major		Replace		$0	
			Masonry		o	None		Minor		Moderate		Major		Replace		$0	
			Framed w/ Wood Siding		o	None		Minor		Moderate		Major		Replace		$0	
			Framed w/Metal Panel	100%	x	None		Minor		Moderate		Major		Replace		$0	
			Framed w/Stucco		o	None		Minor		Moderate		Major		Replace		$0	
			Framed w/Masonry Veneer		o	None		Minor		Moderate		Major		Replace		$0	
		B2020 Exterior Windows	Wood		o	None		Minor		Moderate		Major		Replace		$0	
			Aluminum/Steel		o	None		Minor		Moderate		Major		Replace		$0	
			Clad		o	None		Minor		Moderate		Major		Replace		$0	
			Curtain Wall		o	None		Minor		Moderate		Major		Replace		$0	
		B2030 Exterior Doors	Wood		o	None		Minor		Moderate		Major		Replace		$0	
			Hollow Metal	12	x	None		Minor		Moderate		Major		Replace		$0	Including 3 Upward Actin Sectional Doors
			Storefront		o	None		Minor		Moderate		Major		Replace		$0	
	B30 Roofing																
		B3010 Roof Coverings	Asphalt Shingle		o	None		Minor		Moderate		Major		Replace		$0	
			Built-Up		o	None		Minor		Moderate		Major		Replace		$0	
			Single Ply		o	None		Minor		Moderate		Major		Replace		$0	
			Metal	100%	x	None		Minor		Moderate		Major		Replace		$0	
			Concrete Tile		o	None		Minor		Moderate		Major		Replace		$0	
		B3020 Roof Openings	Skylights		o	None		Minor		Moderate		Major		Replace		$0	By Building GSF
			Access Hatch		o	None		Minor		Moderate		Major		Replace		$0	Per hatch
C INTERIORS																	
	C10 Interior Construction																
		C1010 Partitions	Framed	100%	x	None		Minor		Moderate		Major		Replace		$0	

	Masonry			None		Minor		Moderate		Major		Replace		$0	
C1020 Interior Doors	Wood	2	x	None		Minor		Moderate		Major		Replace		$0	
	Hollow Metal	3	x	None		Minor		Moderate		Major		Replace		$0	
C1030 Fittings	NOT USED			None		Minor		Moderate		Major		Replace			
C20 Stairs															
C2010 Stair Construction	Wood		o	None		Minor		Moderate		Major		Replace		$0	Cost/Flight
	Metal		o	None		Minor		Moderate		Major		Replace		$0	Cost/Flight
	Concrete		o	None		Minor		Moderate		Major		Replace		$0	Cost/Flight
C2020 Stair Finishes	Concrete Fill		o	None		Minor		Moderate		Major		Replace		$0	Cost/Flight
	Resilient		o	None		Minor		Moderate		Major		Replace		$0	Cost/Flight
C30 Interior Finishes															
C3010 Wall Finishes	Paint on Masonry		o	None		Minor		Moderate		Major		Replace		$0	
	Wallboard	13%	x	None		Minor		Moderate		Major		Replace		$0	
	Wainscot	50%	x	None		Minor		Moderate		Major		Replace		$0	
	Ceramic Tile		o	None		Minor		Moderate		Major		Replace		$0	
C3020 Floor Finishes	Carpet / Soft Surface		o	None		Minor		Moderate		Major		Replace		$0	
	Resilient Tile		o	None		Minor		Moderate		Major		Replace		$0	
	Resilient Sheet	13%		None		Minor		Moderate		Major	x	Replace	100%	$25,609	
	Polished Concrete	87%	x	None		Minor		Moderate		Major		Replace		$0	
	Ceramic Tile		o	None		Minor		Moderate		Major		Replace		$0	
	Liquid Applied		o	None		Minor		Moderate		Major		Replace		$0	
	Wood Sports Floor		o	None		Minor		Moderate		Major		Replace		$0	
C3030 Ceiling Finishes	Wallboard		o	None		Minor		Moderate		Major		Replace		$0	
	Lay-In Ceiling Tile	13%		None	x	Minor		Moderate		Major		Replace	50%	$1,067	
	Glued-Up Ceiling Tile		o	None		Minor		Moderate		Major		Replace		$0	
	Painted Structure		o	None		Minor		Moderate		Major		Replace		$0	
D SERVICES															
D10 Conveying															
D1010 Elevators & Lifts			o	None		Minor		Moderate		Major		Replace		$0	
D1020 Escalators & Moving Walks			o	None		Minor		Moderate		Major		Replace		$0	
D1090 Other Conveying Systems			o	None		Minor		Moderate		Major		Replace		$0	
D20 Plumbing															
D2010 Plumbing Fixtures		15%		None		Minor		Moderate		Major		Replace		$0	All (N) fixtures must meet ADA requirements by code. Drinking fountains in the gym were out of service.
D2020 Domestic Water Distribution		15%		None		Minor		Moderate		Major		Replace		$0	
D2030 Sanitary Waste		15%		None		Minor		Moderate		Major		Replace		$0	
D2040 Rain Water Drainage		100%		None		Minor		Moderate		Major		Replace		$0	
D2090 Other Plumbing Systems	NOT USED			None		Minor		Moderate		Major		Replace			
D30 HVAC															
D3010 Energy Supply		100%		None		Minor		Moderate		Major		Replace		$0	
D3020 Heat Generating Systems	Boiler		o	None		Minor		Moderate		Major		Replace		$0	
	Air Handler		o	None		Minor		Moderate		Major		Replace		$0	
	Furnace	100%		None		Minor		Moderate		Major		Replace		$0	
	Heat Exchanger		o	None		Minor		Moderate		Major		Replace		$0	
D3030 Cooling Generating Systems	Component of air handler		o	None		Minor		Moderate		Major		Replace		$0	
	Stand alone chiller		o	None		Minor		Moderate		Major		Replace		$0	
D3040 Distribution Systems	Ductwork		o	None		Minor		Moderate		Major		Replace		$0	
	Hot water return & supply		o	None		Minor		Moderate		Major		Replace		$0	
D3050 Terminal & Package Units	Above ceiling VAV unit		o	None		Minor		Moderate		Major		Replace		$0	
	In-room ventilator unit		o	None		Minor		Moderate		Major		Replace		$0	

		In-room radiant unit		o	None	Minor	Moderate	Major	Replace		$0	
	D3060 Controls & Instrumentation		100%	x	None	Minor	Moderate	Major	Replace		$0	
	D3070 Systems Testing & Balancing		100%	x	None	Minor	Moderate	Major	Replace		$0	
	D3090 Other HVAC Systems & Equipment	NOT USED			None	Minor	Moderate	Major	Replace			
	D40 Fire Protection											
	D4010 Sprinklers		100%	x	None	Minor	Moderate	Major	Replace		$0	
	D4020 Standpipes		100%	x	None	Minor	Moderate	Major	Replace		$0	
	D4030 Fire Protection Specialties		100%	x	None	Minor	Moderate	Major	Replace		$0	
	D4090 Other Fire Protection Systems	NOT USED			None	Minor	Moderate	Major	Replace			
	D50 Electrical											
	D5010 Electrical Service & Distribution		100%	x	None	Minor	Moderate	Major	Replace		$0	
	D5020 Lighting and Branch Wiring		100%	x	None	Minor	Moderate	Major	Replace		$0	
	D5030 Communications & Security	Voice / Data System	100%	x	None	Minor	Moderate	Major	Replace		$0	OK
		Clock / Intercom System	100%	x	None	Minor	Moderate	Major	Replace		$0	OK
		Closed Circuit Surveillance	100%	x	None	Minor	Moderate	Major	Replace		$0	OK
		Access Control System	100%	x	None	Minor	Moderate	Major	Replace		$0	OK
		Intrusion Alarm System	100%	x	None	Minor	Moderate	Major	Replace		$0	Yes
		Fire Alarm / Detection	100%	x	None	Minor	Moderate	Major	Replace		$0	Yes
		Lighting Control System	100%	x	None	Minor	Moderate	Major	Replace		$0	On sensors
	D5090 Other Electrical Systems	NOT USED			None	Minor	Moderate	Major	Replace			
E	**EQUIPMENT & FURNISHINGS**											
	E10 Equipment											
	E1010 Commercial Equipment	Food Service		o	None	Minor	Moderate	Major	Replace		$0	
		Vocational		o	None	Minor	Moderate	Major	Replace		$0	
	E1020 Institutional Equipment	Science		o	None	Minor	Moderate	Major	Replace		$0	
		Art		o	None	Minor	Moderate	Major	Replace		$0	
		Stage Performance		o	None	Minor	Moderate	Major	Replace		$0	Cost/SF of Stage Performance Area
		Restroom Accessories/Stalls	10%	x	None	Minor	Moderate	Major	x Replace	25%	$813	
	E1030 Vehicular Equipment	NOT USED			None	Minor	Moderate	Major	Replace			
	E1090 Other Equipment	NOT USED			None	Minor	Moderate	Major	Replace			
	E20 Furnishings											
	E2010 Fixed Furnishings		3%	x	None	Minor	Moderate	Major	x Replace	50%	$2,295	Lockers
	E2020 Movable Furnishings		3%	x	None	Minor	Moderate	Major	Replace		$0	
F	**SPECIAL CONSTRUCTION & DEMOLITION - NOT USED**											
G	**BUILDING SITE WORK**											
	G10 Site Preparation	NOT USED										
	G20 Site Improvements											
	G2010 Roadways			o	None	Minor	Moderate	Major	Replace		$0	Cost/SF of surface area (These are included with Main Building
	G2020 Parking Lots			o	None	Minor	Moderate	Major	Replace		$0	Cost/SF of surface area
	G2030 Pedestrian Paving			o	None	Minor	Moderate	Major	Replace		$0	Cost/SF of surface area
	G2040 Site Development			o	None	Minor	Moderate	Major	Replace		$0	Cost/LF of fencing
	G2050 Landscaping			o	None	Minor	Moderate	Major	Replace		$0	Cost/SF of irrigated area
	G30 Site Mechanical Utilities											
	G3010 Water Supply	Domestic	490	x	None	Minor	Moderate	Major	Replace		$0	Enter LF of pipe in cell E143
		Fire	490	x	None	Minor	Moderate	Major	Replace		$0	Enter LF of pipe in cell E144
	G3020 Sanitary Sewer		490	x	None	Minor	Moderate	Major	Replace		$0	Enter LF of pipe in cell E145
	G3030 Storm Sewer			o	None	Minor	Moderate	Major	Replace		$0	Enter SF of area to be drained
	G3040 Heating Distribution			o	None	Minor	Moderate	Major	Replace		$0	Enter LF of pipe in cell E147

G3050 Cooling Distribution			o	None	Minor	Moderate	Major	Replace		$0	Enter LF of pipe in cell E148
G3060 Fuel Distribution		490	x	None	Minor	Moderate	Major	Replace		$0	Enter LF of pipe in cell E149
G3090 Other Site Mechanical Utilities	NOT USED			None	Minor	Moderate	Major	Replace			
G40 Site Electrical Utilities											
G4010 Electrical Distribution	Service	100%	x	None	Minor	Moderate	Major	Replace		$0	
	Generator		o	None	Minor	Moderate	Major	Replace		$0	
G4020 Site Lighting		100%	x	None	Minor	Moderate	Major	Replace		$0	
G4030 Site Communications & Security		50%	x	None	Minor	Moderate	Major	Replace		$0	
G4090 Other Site Electrical Utilities	NOT USED			None	Minor	Moderate	Major	Replace			
G90 Other Site Construction	NOT USED										

OTHER

Description of System	Unit of Measure	Quantity	Unit Budget	Extended	Notes
				$0	
				$0	
				$0	
				$0	
				$0	
				$0	
				$0	

Physical Condition Budget Sub-Total	**$29,784**
Budgeted Development Costs	**$11,318**
Physical Condition Budget TOTAL	**$41,101**
Cost with Escalation to June 2021	**$46,855**
Cost with Escalation to June 2022	**$48,730**
Cost with Escalation to June 2023	**$50,679**
Replacement Budget	**$9,741,254**

HIGH SCHOOL BUILDINGS

Base Information Sheet

Item	Data	Notes / Explanation
District Name:	Gervais SD 1	Pull-down menu of the 197 Districts
Site Name:	Gervais High School	Typically the name that is used for the facility / campus
Building Name:	Gervais High School	If only one building on site, refer to "main"
Building ID:	21370300	Please use the same ID that is assigned to this building in the annual Building Collection.
Building Type:	High School	Pull-down menu - feeds FCI calculation
Physical Address of Building:	300 E Douglas AVE	Informational only - does not link
Original Year of Building Completion	1963	When was the original building completed and ready for use
Original Construction Type		What type of construction was used to complete original building
Describe Other Construction Type		If you choose other construction type please describe here
County:	Marion	Pull-down menu of the 36 counties - sets location factor for budgets
Gross Square Footage:	70,040	Calculated from exterior face of walls (excluding eaves, outbuilding, porches, canopies, and similar)
Site Acreage:	29	District records

Assessor Company:	IBI Group	Certified company
Assessor Name:	Steve Winkle, Kate Barbaria	For follow up questions
Contact (Phone):	503-273-9192	
Contact (E-Mail):	steve.winkle@ibigroup.com	
Date of Assessment:	October 09-10, 2019	Might reference back for inflation calculation (future)

*Building ID Format: Located in ODE "Buildings Collection" database

Base Information Sheet

Item	Data	Notes / Explanation
District Name:	Gervais SD 1	Pull-down menu of the 197 Districts
Site Name:	Gervais High School	Typically the name that is used for the facility / campus
Building Name:	Gervais High School Agricultural Building	If only one building on site, refer to "main"
Building ID:	21370301	Please use the same ID that is assigned to this building in the annual Building Collection.
Building Type:	Vocational Building	Pull-down menu - feeds FCI calculation
Physical Address of Building:	300 E Douglas AVE	Informational only - does not link
Original Year of Building Completion	2009	When was the original building completed and ready for use
Original Construction Type		What type of construction was used to complete original building
Describe Other Construction Type		If you choose other construction type please describe here
County:	Marion	Pull-down menu of the 36 counties - sets location factor for budgets
Gross Square Footage:	8,750	Calculated from exterior face of walls (excluding eaves, outbuilding, porches, canopies, and similar)
Site Acreage:	Included with main building	District records

Assessor Company:	IBI Group	Certified company
Assessor Name:	Steve Winkle, Kate Barbaria	For follow up questions
Contact (Phone):	503-273-9192	
Contact (E-Mail):	steve.winkle@ibigroup.com	
Date of Assessment:	October 09-10, 2019	Might reference back for inflation calculation (future)

*Building ID Format: Located in ODE "Buildings Collection" database

Physical Condition Assessment

District Name: Gervais SD 1
Site Name: Gervais High School
Building Name: Gervais High School
Building ID: 21370300

REMINDER: FILL OUT ALL INFORMATION ON '*BASE INFORMATION SHEET*' BEFORE ENTERING DATA ON THIS SHEET

An unused cell or system that should not receive direct user input

An automatically populated cell from user input elsewhere in the file - do not overwrite

Level 1	Level 2	Level 3	Type (as applicable)	% of Building or Number		None		Minor		Moderate		Major		Replace as part of Renovation	% of System or Finish	Automated Budget Estimate	Notes
					LEVEL OF ACTION												
A SUBSTRUCTURE																	
	A10 Foundations																
		A1010 Standard Foundations		100%	x	None		Minor		Moderate		Major		Replace		$0	
		A1020 Special Foundations			o	None		Minor		Moderate		Major		Replace		$0	
		A1030 Slab on Grade		90%	x	None		Minor		Moderate		Major		Replace		$0	
	A20 Basement Construction																
		A2010 Basement Excavation	NOT USED			None		Minor		Moderate		Major		Replace			
		A2020 Basement Walls			o	None		Minor		Moderate		Major		Replace		$0	
B SHELL																	
	B10 Superstructure																
		B1010 Floor Construction	Wood	10%	x	None		Minor		Moderate		Major		Replace		$0	
			Steel		o	None		Minor		Moderate		Major		Replace		$0	
			Concrete		o	None		Minor		Moderate		Major		Replace		$0	
		B1020 Roof Construction	Wood	100%	x	None		Minor		Moderate		Major		Replace		$0	
			Steel		o	None		Minor		Moderate		Major		Replace		$0	
			Concrete		o	None		Minor		Moderate		Major		Replace		$0	
	B20 Exterior Enclosure																
		B2010 Exterior Walls	Concrete Formed / Tilt	95%		None		Minor	x	Moderate		Major		Replace	15%	$36,978	
			Masonry		o	None		Minor		Moderate		Major		Replace		$0	
			Framed w/ Wood Siding	5%		None		Minor		Moderate	x	Major		Replace	60%	$13,941	
			Framed w/Metal Panel		o	None		Minor		Moderate		Major		Replace		$0	
			Framed w/Stucco		o	None		Minor		Moderate		Major		Replace		$0	
			Framed w/Masonry Veneer		o	None		Minor		Moderate		Major		Replace		$0	
		B2020 Exterior Windows	Wood	10%	o	None		Minor		Moderate		Major		Replace		$0	
			Aluminum/Steel	90%		None		Minor	x	Moderate		Major		Replace	20%	$38,661	single pane
			Clad		o	None		Minor		Moderate		Major		Replace		$0	
			Curtain Wall		o	None		Minor		Moderate		Major		Replace		$0	
		B2030 Exterior Doors	Wood		o	None		Minor		Moderate		Major		Replace		$0	
			Hollow Metal	27		None		Minor		Moderate	x	Major		Replace	60%	$24,008	
			Storefront		o	None		Minor		Moderate		Major		Replace		$0	
	B30 Roofing																
		B3010 Roof Coverings	Asphalt Shingle		o	None		Minor		Moderate		Major		Replace		$0	
			Built-Up	100%		None		Minor		Moderate		Major	x	Replace	100%	$2,075,986	Roof is in very poor condition (20+ yrs old)
			Single Ply		o	None		Minor		Moderate		Major		Replace		$0	
			Metal		o	None		Minor		Moderate		Major		Replace		$0	
			Concrete Tile		o	None		Minor		Moderate		Major		Replace		$0	
		B3020 Roof Openings	Skylights		o	None		Minor		Moderate		Major		Replace		$0	By Building GSF
			Access Hatch	2		None		Minor		Moderate		Major		Replace		$0	Per hatch
C INTERIORS																	
	C10 Interior Construction																
		C1010 Partitions	Framed	84%	x	None		Minor		Moderate		Major		Replace		$0	

		Masonry	16%	x	None		Minor		Moderate		Major		Replace		$0	
	C1020 Interior Doors	Wood	120		None		Minor	x	Moderate		Major		Replace	20%	$21,888	
		Hollow Metal		o	None		Minor		Moderate		Major		Replace		$0	
	C1030 Fittings	NOT USED			None		Minor		Moderate		Major		Replace			
C20 Stairs																
	C2010 Stair Construction	Wood	2	x	None		Minor		Moderate		Major		Replace		$0	Cost/Flight - Stage and Upper gym
		Metal		o	None		Minor		Moderate		Major		Replace		$0	Cost/Flight
		Concrete		o	None		Minor		Moderate		Major		Replace		$0	Cost/Flight
	C2020 Stair Finishes	Concrete Fill		o	None		Minor		Moderate		Major		Replace		$0	Cost/Flight
		Resilient	2		None		Minor		Moderate		Major	x	Replace	100%	$5,700	Cost/Flight
C30 Interior Finishes																
	C3010 Wall Finishes	Paint on Masonry		o	None		Minor		Moderate		Major		Replace		$0	
		Wallboard	82%		None	x	Minor		Moderate		Major		Replace	50%	$66,128	
		Wainscot	15%		None	x	Minor		Moderate		Major		Replace	100%	$24,193	
		Ceramic Tile	3%		None		Minor		Moderate		Major	x	Replace	50%	$2,910	Includes glazed masonry
	C3020 Floor Finishes	Carpet / Soft Surface	13%		None		Minor		Moderate		Major	x	Replace	100%	$69,338	
		Resilient Tile	43%		None		Minor		Moderate		Major	x	Replace	75%	$175,101	
		Resilient Sheet	2%		None		Minor		Moderate		Major	x	Replace	100%	$19,163	
		Polished Concrete	20%	x	None		Minor		Moderate		Major		Replace		$0	
		Ceramic Tile	6%		None		Minor		Moderate		Major	x	Replace	50%	$60,220	
		Liquid Applied		o	None		Minor		Moderate		Major		Replace		$0	
		Wood Sports Floor	16%		None		Minor	x	Moderate		Major		Replace	100%	$89,427	
	C3030 Ceiling Finishes	Wallboard	8%		None		Minor		Moderate		Major	x	Replace	50%	$38,326	
		Lay-In Ceiling Tile	18%		None		Minor		Moderate		Major	x	Replace	50%	$57,489	
		Glued-Up Ceiling Tile	50%		None		Minor		Moderate		Major	x	Replace	20%	$37,847	
		Painted Structure	24%	x	None		Minor		Moderate		Major	x	Replace	12%	$7,382	Includes "tectum" in gym.
D SERVICES																
D10 Conveying																
	D1010 Elevators & Lifts		1	x	None		Minor		Moderate		Major		Replace		$0	lift at stage
	D1020 Escalators & Moving Walks			o	None		Minor		Moderate		Major		Replace		$0	
	D1090 Other Conveying Systems			o	None		Minor		Moderate		Major		Replace		$0	
D20 Plumbing																
	D2010 Plumbing Fixtures		15%		None		Minor		Moderate		Major	x	Replace	40%	$43,117	All (N) fixtures must meet ADA requirements by code.
	D2020 Domestic Water Distribution		15%		None	x	Minor		Moderate		Major		Replace	100%	$14,732	Original pipes
	D2030 Sanitary Waste		15%		None		Minor		Moderate		Major	x	Replace	80%	$19,834	Original pipes, poor condition
	D2040 Rain Water Drainage		21%	x	None		Minor		Moderate		Major		Replace		$0	Original pipes, condition reported to be OK
	D2090 Other Plumbing Systems	NOT USED			None		Minor		Moderate		Major		Replace			
D30 HVAC																
	D3010 Energy Supply		10%	x	None		Minor		Moderate		Major		Replace		$0	
	D3020 Heat Generating Systems	Boiler	100%	x	None		Minor		Moderate		Major		Replace		$0	New Boilers
		Air Handler	30%		None		Minor		Moderate	x	Major		Replace	20%	$11,546	Gym and Cafeteria (1962), new controls, natural gas
		Furnace		o	None		Minor		Moderate		Major		Replace		$0	
		Heat Exchanger		o	None		Minor		Moderate		Major		Replace		$0	
	D3030 Cooling Generating Systems	Component of air handler		o	None		Minor		Moderate		Major		Replace		$0	
		Stand alone chiller		o	None		Minor		Moderate		Major		Replace		$0	
	D3040 Distribution Systems	Ductwork		o	None		Minor		Moderate		Major		Replace		$0	
		Hot water return & supply	100%	x	None		Minor		Moderate		Major		Replace		$0	
	D3050 Terminal & Package Units	Above ceiling VAV unit		o	None		Minor		Moderate		Major		Replace		$0	

	In-room ventilator unit	100%	x	None		Minor		Moderate		Major		Replace		$0	Classrooms - thru-wall units being upgraded now, a dondenser unit is being located outside of each room for cooling to b added to these units.
	In-room radiant unit	10%	x	None		Minor		Moderate		Major		Replace		$0	New DDC controls
D3060 Controls & Instrumentation			o	None		Minor		Moderate		Major		Replace		$0	
D3070 Systems Testing & Balancing			o	None		Minor		Moderate		Major		Replace		$0	
D3090 Other HVAC Systems & Equipment	NOT USED			None		Minor		Moderate		Major		Replace			
D40 Fire Protection															
D4010 Sprinklers			o	None		Minor		Moderate		Major		Replace		$0	
D4020 Standpipes			o	None		Minor		Moderate		Major		Replace		$0	
D4030 Fire Protection Specialties		100%	x	None		Minor		Moderate		Major		Replace		$0	
D4090 Other Fire Protection Systems	NOT USED			None		Minor		Moderate		Major		Replace			
D50 Electrical															
D5010 Electrical Service & Distribution		10%		None		Minor	x	Moderate		Major		Replace	25%	$7,146	
D5020 Lighting and Branch Wiring		100%	x	None		Minor		Moderate		Major		Replace		$0	New LED lighting
D5030 Communications & Security	Voice / Data System	100%	x	None		Minor		Moderate		Major		Replace		$0	OK
	Clock / Intercom System	100%	x	None		Minor		Moderate		Major		Replace		$0	New LED lighting
	Closed Circuit Surveillance	100%	x	None		Minor		Moderate		Major		Replace		$0	OK
	Access Control System	100%	x	None		Minor		Moderate		Major		Replace		$0	OK
	Intrusion Alarm System	100%	x	None		Minor		Moderate		Major		Replace		$0	Yes
	Fire Alarm / Detection	100%	x	None		Minor		Moderate		Major		Replace		$0	Yes
	Lighting Control System	100%	x	None		Minor		Moderate		Major		Replace		$0	OK - lights are on sensors
D5090 Other Electrical Systems	NOT USED			None		Minor		Moderate		Major		Replace			
E EQUIPMENT & FURNISHINGS															
E10 Equipment															
E1010 Commercial Equipment	Food Service	3%	x	None		Minor		Moderate		Major		Replace		$0	Yes, good
	Vocational		0	None		Minor		Moderate		Major		Replace		$0	In another building: Welding shop-very good, Wood Shop- good
E1020 Institutional Equipment	Science	6		None		Minor		Moderate		Major	x	Replace	100%	$27	Reffinished casework countertops are poor, gas & water, sanitary piping
	Art	2		None		Minor		Moderate		Major	x	Replace	100%	$9	No kiln, new lazer printer
	Stage Performance	3	x	None		Minor		Moderate		Major		Replace		$0	Cost/SF of Stage Performance Area
	Restroom Accessories/Stalls	3%		None		Minor		Moderate		Major	x	Replace	50%	$2,371	Replace most
E1030 Vehicular Equipment	NOT USED			None		Minor		Moderate		Major		Replace			
E1090 Other Equipment	NOT USED			None		Minor		Moderate		Major		Replace			
E20 Furnishings															
E2010 Fixed Furnishings		5%		None		Minor		Moderate		Major	x	Replace	100%	$37,208	Built-in mostly at HS
E2020 Movable Furnishings		5%		None		Minor		Moderate		Major	x	Replace	100%	$95,815	
F SPECIAL CONSTRUCTION & DEMOLITION - NOT USED															
G BUILDING SITE WORK															
G10 Site Preparation	NOT USED														
G20 Site Improvements															
G2010 Roadways		32000		None		Minor		Moderate		Major	x	Replace	30%	$87,552	Cost/SF of surface area
G2020 Parking Lots		80000		None		Minor		Moderate	x	Major		Replace	60%	$355,680	Cost/SF of surface area
G2030 Pedestrian Paving		6000		None		Minor		Moderate	x	Major		Replace	15%	$9,234	Cost/SF of surface area
G2040 Site Development		4500	x	None		Minor		Moderate		Major		Replace		$0	Cost/LF of fencing

G2050 Landscaping			x	None	Minor	Moderate	Major	Replace		$0	Cost/SF of irrigated area There are 2 wells serving 3 soccer fields, 1 baseball field and a lawn at the daycare bldg.
G30 Site Mechanical Utilities											
G3010 Water Supply	Domestic	250	x	None	Minor	Moderate	Major	Replace		$0	Enter LF of pipe in cell E143
	Fire		o	None	Minor	Moderate	Major	Replace		$0	Enter LF of pipe in cell E144
G3020 Sanitary Sewer		250	x	None	Minor	Moderate	Major	Replace		$0	Enter LF of pipe in cell E145
G3030 Storm Sewer		750	x	None	Minor	Moderate	Major	Replace		$0	Enter SF of area to be drained
G3040 Heating Distribution			0	None	Minor	Moderate	Major	Replace		$0	Enter LF of pipe in cell E147
G3050 Cooling Distribution			0	None	Minor	Moderate	Major	Replace		$0	Enter LF of pipe in cell E148
G3060 Fuel Distribution		250	x	None	Minor	Moderate	Major	Replace		$0	Enter LF of pipe in cell E149
G3090 Other Site Mechanical Utilities	NOT USED			None	Minor	Moderate	Major	Replace			
G40 Site Electrical Utilities											
G4010 Electrical Distribution	Service	100%	x	None	Minor	Moderate	Major	Replace		$0	HS will experience half power that damages electronics
	Generator	3%	x	None	Minor	Moderate	Major	Replace		$0	Natural gas generator only at freezer.
G4020 Site Lighting		7%	x	None	Minor	Moderate	Major	Replace		$0	
G4030 Site Communications & Security			o	None	Minor	Moderate	Major	Replace		$0	
G4090 Other Site Electrical Utilities	NOT USED			None	Minor	Moderate	Major	Replace			
G90 Other Site Construction	NOT USED										

OTHER

Description of System	Unit of Measure	Quantity	Unit Budget	Extended	Notes
				$0	
				$0	
				$0	
				$0	
				$0	
				$0	
				$0	

Physical Condition Budget Sub-Total	**$3,548,956**
Budgeted Development Costs	**$1,348,603**
Physical Condition Budget TOTAL	**$4,897,559**
Cost with Escalation to June 2021	**$5,583,218**
Cost with Escalation to June 2022	**$5,806,546**
Cost with Escalation to June 2023	**$6,038,808**
Replacement Budget	**$41,320,098**

Physical Condition Assessment

District Name: Gervais SD 1
Site Name: Gervais High School
Building Name: Gervais High School Agricultural Building
Building ID: 21370301

REMINDER: FILL OUT ALL INFORMATION ON '*BASE INFORMATION SHEET*' BEFORE ENTERING DATA ON THIS SHEET

An unused cell or system that should not receive direct user input

An automatically populated cell from user input elsewhere in the file - do not overwrite

Level 1	Level 2	Level 3	Type (as applicable)	% of Building or Number	LEVEL OF ACTION													Notes
						None		Minor		Moderate		Major		Replace as part of Renovation	% of System or Finish	Automated Budget Estimate		
A SUBSTRUCTURE																		
	A10 Foundations																	
		A1010 Standard Foundations		100%	x	None		Minor		Moderate		Major		Replace		$0		
		A1020 Special Foundations			o	None		Minor		Moderate		Major		Replace		$0		
		A1030 Slab on Grade		100%	x	None		Minor		Moderate		Major		Replace		$0		
	A20 Basement Construction																	
		A2010 Basement Excavation	NOT USED			None		Minor		Moderate		Major		Replace				
		A2020 Basement Walls			o	None		Minor		Moderate		Major		Replace		$0		
B SHELL																		
	B10 Superstructure																	
		B1010 Floor Construction	Wood		o	None		Minor		Moderate		Major		Replace		$0		
			Steel		o	None		Minor		Moderate		Major		Replace		$0		
			Concrete		o	None		Minor		Moderate		Major		Replace		$0		
		B1020 Roof Construction	Wood		o	None		Minor		Moderate		Major		Replace		$0		
			Steel	100%		None		Minor		Moderate		Major		Replace		$0		
			Concrete		o	None		Minor		Moderate		Major		Replace		$0		
	B20 Exterior Enclosure																	
		B2010 Exterior Walls	Concrete Formed / Tilt		o	None		Minor		Moderate		Major		Replace		$0		
			Masonry		o	None		Minor		Moderate		Major		Replace		$0		
			Framed w/ Wood Siding		o	None		Minor		Moderate		Major		Replace		$0		
			Framed w/Metal Panel	100%	x	None		Minor		Moderate		Major		Replace		$0		
			Framed w/Stucco		o	None		Minor		Moderate		Major		Replace		$0		
			Framed w/Masonry Veneer		o	None		Minor		Moderate		Major		Replace		$0		
		B2020 Exterior Windows	Wood		o	None		Minor		Moderate		Major		Replace		$0		
			Aluminum/Steel		o	None		Minor		Moderate		Major		Replace		$0		
			Clad		o	None		Minor		Moderate		Major		Replace		$0		
			Curtain Wall		o	None		Minor		Moderate		Major		Replace		$0		
		B2030 Exterior Doors	Wood		o	None		Minor		Moderate		Major		Replace		$0		
			Hollow Metal	8	x	None		Minor		Moderate		Major		Replace		$0	including upward acting sectional doors	
			Storefront		o	None		Minor		Moderate		Major		Replace		$0		
	B30 Roofing																	
		B3010 Roof Coverings	Asphalt Shingle		o	None		Minor		Moderate		Major		Replace		$0		
			Built-Up		o	None		Minor		Moderate		Major		Replace		$0		
			Single Ply		o	None		Minor		Moderate		Major		Replace		$0		
			Metal	100%	x	None		Minor		Moderate		Major		Replace		$0		
			Concrete Tile		o	None		Minor		Moderate		Major		Replace		$0		
		B3020 Roof Openings	Skylights		o	None		Minor		Moderate		Major		Replace		$0	By Building GSF	
			Access Hatch		o	None		Minor		Moderate		Major		Replace		$0	Per hatch	
C INTERIORS																		
	C10 Interior Construction																	
		C1010 Partitions	Framed	100%	x	None		Minor		Moderate		Major		Replace		$0		

	Masonry		o	None	Minor	Moderate	Major	Replace		$0	
C1020 Interior Doors	Wood		o	None	Minor	Moderate	Major	Replace		$0	
	Hollow Metal		o	None	Minor	Moderate	Major	Replace		$0	
C1030 Fittings	NOT USED			None	Minor	Moderate	Major	Replace			
C20 Stairs											
C2010 Stair Construction	Wood		o	None	Minor	Moderate	Major	Replace		$0	Cost/Flight
	Metal		o	None	Minor	Moderate	Major	Replace		$0	Cost/Flight
	Concrete		o	None	Minor	Moderate	Major	Replace		$0	Cost/Flight
C2020 Stair Finishes	Concrete Fill		o	None	Minor	Moderate	Major	Replace		$0	Cost/Flight
	Resilient		o	None	Minor	Moderate	Major	Replace		$0	Cost/Flight
C30 Interior Finishes											
C3010 Wall Finishes	Paint on Masonry		o	None	Minor	Moderate	Major	Replace		$0	
	Wallboard	50%	x	None	Minor	Moderate	Major	Replace		$0	
	Wainscot	50%	x	None	Minor	Moderate	Major	Replace		$0	
	Ceramic Tile		o	None	Minor	Moderate	Major	Replace		$0	
C3020 Floor Finishes	Carpet / Soft Surface		o	None	Minor	Moderate	Major	Replace		$0	
	Resilient Tile		o	None	Minor	Moderate	Major	Replace		$0	
	Resilient Sheet		o	None	Minor	Moderate	Major	Replace		$0	
	Polished Concrete	100%	x	None	Minor	Moderate	Major	Replace		$0	
	Ceramic Tile		o	None	Minor	Moderate	Major	Replace		$0	
	Liquid Applied		o	None	Minor	Moderate	Major	Replace		$0	
	Wood Sports Floor		o	None	Minor	Moderate	Major	Replace		$0	
C3030 Ceiling Finishes	Wallboard		o	None	Minor	Moderate	Major	Replace		$0	
	Lay-In Ceiling Tile		o	None	Minor	Moderate	Major	Replace		$0	
	Glued-Up Ceiling Tile		o	None	Minor	Moderate	Major	Replace		$0	
	Painted Structure		o	None	Minor	Moderate	Major	Replace		$0	
D SERVICES											
D10 Conveying											
D1010 Elevators & Lifts			o	None	Minor	Moderate	Major	Replace		$0	
D1020 Escalators & Moving Walks			o	None	Minor	Moderate	Major	Replace		$0	
D1090 Other Conveying Systems			o	None	Minor	Moderate	Major	Replace		$0	
D20 Plumbing											
D2010 Plumbing Fixtures			o	None	Minor	Moderate	Major	Replace		$0	All (N) fixtures must meet ADA requirements by code.
D2020 Domestic Water Distribution			o	None	Minor	Moderate	Major	Replace		$0	
D2030 Sanitary Waste			o	None	Minor	Moderate	Major	Replace		$0	
D2040 Rain Water Drainage			o	None	Minor	Moderate	Major	Replace		$0	
D2090 Other Plumbing Systems	NOT USED			None	Minor	Moderate	Major	Replace			
D30 HVAC											
D3010 Energy Supply		100%	x	None	Minor	Moderate	Major	Replace		$0	
D3020 Heat Generating Systems	Boiler		o	None	Minor	Moderate	Major	Replace		$0	
	Air Handler		o	None	Minor	Moderate	Major	Replace		$0	
	Furnace	100%	x	None	Minor	Moderate	Major	Replace		$0	
	Heat Exchanger		o	None	Minor	Moderate	Major	Replace		$0	
D3030 Cooling Generating Systems	Component of air handler		o	None	Minor	Moderate	Major	Replace		$0	
	Stand alone chiller		o	None	Minor	Moderate	Major	Replace		$0	
D3040 Distribution Systems	Ductwork		o	None	Minor	Moderate	Major	Replace		$0	
	Hot water return & supply		o	None	Minor	Moderate	Major	Replace		$0	
D3050 Terminal & Package Units	Above ceiling VAV unit		o	None	Minor	Moderate	Major	Replace		$0	
	In-room ventilator unit		o	None	Minor	Moderate	Major	Replace		$0	
	In-room radiant unit		o	None	Minor	Moderate	Major	Replace		$0	

D3060 Controls & Instrumentation		100%	x	None		Minor		Moderate		Major		Replace		$0	
D3070 Systems Testing & Balancing		100%	x	None		Minor		Moderate		Major		Replace		$0	
D3090 Other HVAC Systems & Equipment	NOT USED			None		Minor		Moderate		Major		Replace			
D40 Fire Protection															
D4010 Sprinklers		100%	x	None		Minor		Moderate		Major		Replace		$0	
D4020 Standpipes		100%	x	None		Minor		Moderate		Major		Replace		$0	
D4030 Fire Protection Specialties		100%	x	None		Minor		Moderate		Major		Replace		$0	
D4090 Other Fire Protection Systems	NOT USED			None		Minor		Moderate		Major		Replace			
D50 Electrical															
D5010 Electrical Service & Distribution		100%	x	None		Minor		Moderate		Major		Replace		$0	
D5020 Lighting and Branch Wiring		100%	x	None		Minor		Moderate		Major		Replace		$0	
D5030 Communications & Security	Voice / Data System		o	None		Minor		Moderate		Major		Replace		$0	
	Clock / Intercom System	100%	x	None		Minor		Moderate		Major		Replace		$0	
	Closed Circuit Surveillance		o	None		Minor		Moderate		Major		Replace		$0	
	Access Control System		o	None		Minor		Moderate		Major		Replace		$0	
	Intrusion Alarm System	100%	x	None		Minor		Moderate		Major		Replace		$0	
	Fire Alarm / Detection	100%	x	None		Minor		Moderate		Major		Replace		$0	
	Lighting Control System		o	None		Minor		Moderate		Major		Replace		$0	
D5090 Other Electrical Systems	NOT USED			None		Minor		Moderate		Major		Replace			
E EQUIPMENT & FURNISHINGS															
E10 Equipment															
E1010 Commercial Equipment	Food Service		o	None		Minor		Moderate		Major		Replace		$0	
	Vocational	80%	x	None		Minor		Moderate		Major		Replace		$0	
E1020 Institutional Equipment	Science		o	None		Minor		Moderate		Major		Replace		$0	
	Art		o	None		Minor		Moderate		Major		Replace		$0	
	Stage Performance		o	None		Minor		Moderate		Major		Replace		$0	Cost/SF of Stage Performance Area
	Restroom Accessories/Stalls		o	None		Minor		Moderate		Major		Replace		$0	
E1030 Vehicular Equipment	NOT USED			None		Minor		Moderate		Major		Replace			
E1090 Other Equipment	NOT USED			None		Minor		Moderate		Major		Replace			
E20 Furnishings															
E2010 Fixed Furnishings			o	None		Minor		Moderate		Major		Replace		$0	
E2020 Movable Furnishings		100%	x	None		Minor		Moderate		Major		Replace		$0	
F SPECIAL CONSTRUCTION & DEMOLITION - NOT USED															
G BUILDING SITE WORK															
G10 Site Preparation	NOT USED														
G20 Site Improvements															
G2010 Roadways			o	None		Minor		Moderate		Major		Replace		$0	Cost/SF of surface area (the following is included with the main building)
G2020 Parking Lots			o	None		Minor		Moderate		Major		Replace		$0	Cost/SF of surface area
G2030 Pedestrian Paving			o	None		Minor		Moderate		Major		Replace		$0	Cost/SF of surface area
G2040 Site Development			o	None		Minor		Moderate		Major		Replace		$0	Cost/LF of fencing
G2050 Landscaping			o	None		Minor		Moderate		Major		Replace		$0	Cost/SF of irrigated area
G30 Site Mechanical Utilities															
G3010 Water Supply	Domestic		o	None		Minor		Moderate		Major		Replace		$0	Enter LF of pipe in cell E143
	Fire		o	None		Minor		Moderate		Major		Replace		$0	Enter LF of pipe in cell E144
G3020 Sanitary Sewer			o	None		Minor		Moderate		Major		Replace		$0	Enter LF of pipe in cell E145
G3030 Storm Sewer			o	None		Minor		Moderate		Major		Replace		$0	Enter SF of area to be drained
G3040 Heating Distribution			o	None		Minor		Moderate		Major		Replace		$0	Enter LF of pipe in cell E147
G3050 Cooling Distribution			o	None		Minor		Moderate		Major		Replace		$0	Enter LF of pipe in cell E148

Physical Condition Assessment

G3060 Fuel Distribution		480	x	None	Minor	Moderate	Major	Replace		$0	Enter LF of pipe in cell E149
G3090 Other Site Mechanical Utilities	NOT USED			None	Minor	Moderate	Major	Replace			
G40 Site Electrical Utilities											
G4010 Electrical Distribution	Service	100%	x	None	Minor	Moderate	Major	Replace		$0	
	Generator		o	None	Minor	Moderate	Major	Replace		$0	
G4020 Site Lighting		100%	x	None	Minor	Moderate	Major	Replace		$0	
G4030 Site Communications & Security			o	None	Minor	Moderate	Major	Replace		$0	
G4090 Other Site Electrical Utilities	NOT USED			None	Minor	Moderate	Major	Replace			
G90 Other Site Construction	NOT USED										

OTHER

Description of System	Unit of Measure	Quantity	Unit Budget	Extended	Notes
				$0	
				$0	
				$0	
				$0	
				$0	
				$0	
				$0	

Physical Condition Budget Sub-Total	**$0**
Budgeted Development Costs	**$0**
Physical Condition Budget TOTAL	**$0**
Cost with Escalation to June 2021	**$0**
Cost with Escalation to June 2022	**$0**
Cost with Escalation to June 2023	**$0**
Replacement Budget	**$5,547,497**

IBI GROUP

GERVAIS SCHOOLS est. 1834

SECONDARY BUILDINGS

WELCOME CENTER & PRE-SCHOOL

DAYCARE

SAMUEL BROWN ACADEMY

Base Information Sheet

Item	Data	Notes / Explanation
District Name:	Gervais SD 1	Pull-down menu of the 197 Districts
Site Name:	Welcome Center/CTE Classroom	Typically the name that is used for the facility / campus
Building Name:	Main	If only one building on site, refer to "main"
Building ID:	21370402	Please use the same ID that is assigned to this building in the annual Building Collection.
Building Type:	Other Commercial	Pull-down menu - feeds FCI calculation
Physical Address of Building:	340 First Street	Informational only - does not link
Original Year of Building Completion	2007	When was the original building completed and ready for use
Original Construction Type	Pre-fab wood frame	What type of construction was used to complete original building
Describe Other Construction Type		If you choose other construction type please describe here
County:	Marion	Pull-down menu of the 36 counties - sets location factor for budgets
Gross Square Footage:	1,750	Calculated from exterior face of walls (excluding eaves, outbuilding, porches, canopies, and similar)
Site Acreage:	0.11	District records
Assessor Company:	IBI Group	Certified company
Assessor Name:	Steve Winkle, Kate Barbaria	For follow up questions
Contact (Phone):	503-273-9192	
Contact (E-Mail):	steve.winkle@ibigroup.com	
Date of Assessment:	October 09-10, 2019	Might reference back for inflation calculation (future)

*Building ID Format: Located in ODE "Buildings Collection" database

Base Information Sheet

Item	Data	Notes / Explanation
District Name:	Gervais SD 1	Pull-down menu of the 197 Districts
Site Name:	Preschool	Typically the name that is used for the facility / campus
Building Name:	Main	If only one building on site, refer to "main"
Building ID:	21370401	Please use the same ID that is assigned to this building in the annual Building Collection.
Building Type:	Other Commercial	Pull-down menu - feeds FCI calculation
Physical Address of Building:	340 First Street	Informational only - does not link
Original Year of Building Completion	1995	When was the original building completed and ready for use
Original Construction Type	Pre-fab wood frame	What type of construction was used to complete original building
Describe Other Construction Type		If you choose other construction type please describe here
County:	Marion	Pull-down menu of the 36 counties - sets location factor for budgets
Gross Square Footage:	1,750	Calculated from exterior face of walls (excluding eaves, outbuilding, porches, canopies, and similar)
Site Acreage:	0.11	District records
Assessor Company:	IBI Group	Certified company
Assessor Name:	Steve Winkle, Kate Barbaria	For follow up questions
Contact (Phone):	503-273-9192	
Contact (E-Mail):	steve.winkle@ibigroup.com	
Date of Assessment:	October 09-10, 2019	Might reference back for inflation calculation (future)

*Building ID Format: Located in ODE "Buildings Collection" database

Physical Condition Assessment

District Name: Gervais SD 1
Site Name: Welcome Center/CTE Classroom
Building Name: Main
Building ID: 21370402

REMINDER: FILL OUT ALL INFORMATION ON '*BASE INFORMATION SHEET*' BEFORE ENTERING DATA ON THIS SHEET

An unused cell or system that should not receive direct user input

An automatically populated cell from user input elsewhere in the file - do not overwrite

Level 1	Level 2	Level 3	Type (as applicable)	% of Building or Number		LEVEL OF ACTION: None		Minor		Moderate		Major		Replace as part of Renovation	% of System or Finish	Automated Budget Estimate	Notes
A SUBSTRUCTURE																	
	A10 Foundations																
		A1010 Standard Foundations		100%	x	None		Minor		Moderate		Major		Replace		$0	
		A1020 Special Foundations			o	None		Minor		Moderate		Major		Replace		$0	
		A1030 Slab on Grade			o	None		Minor		Moderate		Major		Replace		$0	
	A20 Basement Construction																
		A2010 Basement Excavation	NOT USED			None		Minor		Moderate		Major		Replace			
		A2020 Basement Walls				None		Minor		Moderate		Major		Replace		$0	
B SHELL																	
	B10 Superstructure																
		B1010 Floor Construction	Wood	100%	x	None		Minor		Moderate		Major		Replace		$0	
			Steel		o	None		Minor		Moderate		Major		Replace		$0	
			Concrete		o	None		Minor		Moderate		Major		Replace		$0	
		B1020 Roof Construction	Wood	100%		None		Minor		Moderate		Major		Replace		$0	
			Steel		o	None		Minor		Moderate		Major		Replace		$0	
			Concrete		o	None		Minor		Moderate		Major		Replace		$0	
	B20 Exterior Enclosure																
		B2010 Exterior Walls	Concrete Formed / Tilt		o	None		Minor		Moderate		Major		Replace		$0	
			Masonry		o	None		Minor		Moderate		Major		Replace		$0	
			Framed w/ Wood Siding	100%		None		Minor	x	Moderate		Major		Replace	5%	$306	
			Framed w/Metal Panel		o	None		Minor		Moderate		Major		Replace		$0	
			Framed w/Stucco		o	None		Minor		Moderate		Major		Replace		$0	
			Framed w/Masonry Veneer		o	None		Minor		Moderate		Major		Replace		$0	
		B2020 Exterior Windows	Wood		o	None		Minor		Moderate		Major		Replace		$0	
			Aluminum/Steel		o	None		Minor		Moderate		Major		Replace		$0	
			Clad	100%	x	None		Minor		Moderate		Major		Replace		$0	
			Curtain Wall		o	None		Minor		Moderate		Major		Replace		$0	
		B2030 Exterior Doors	Wood		o	None		Minor		Moderate		Major		Replace		$0	
			Hollow Metal	2	x	None		Minor		Moderate		Major		Replace		$0	
			Storefront		o	None		Minor		Moderate		Major		Replace		$0	
	B30 Roofing																
		B3010 Roof Coverings	Asphalt Shingle	100%	x	None		Minor		Moderate		Major		Replace		$0	
			Built-Up		o	None		Minor		Moderate		Major		Replace		$0	
			Single Ply		o	None		Minor		Moderate		Major		Replace		$0	
			Metal		o	None		Minor		Moderate		Major		Replace		$0	
			Concrete Tile		o	None		Minor		Moderate		Major		Replace		$0	
		B3020 Roof Openings	Skylights		o	None		Minor		Moderate		Major		Replace		$0	By Building GSF
			Access Hatch		o	None		Minor		Moderate		Major		Replace		$0	Per hatch
C INTERIORS																	
	C10 Interior Construction																
		C1010 Partitions	Framed	100%	x	None		Minor		Moderate		Major		Replace		$0	

		Masonry		o	None		Minor		Moderate		Major		Replace			$0	
	C1020 Interior Doors	Wood	3	x	None		Minor		Moderate		Major		Replace			$0	
		Hollow Metal		o	None		Minor		Moderate		Major		Replace			$0	
	C1030 Fittings	NOT USED			None		Minor		Moderate		Major		Replace				
C20 Stairs																	
	C2010 Stair Construction	Wood		o	None		Minor		Moderate		Major		Replace			$0	Cost/Flight
		Metal		o	None		Minor		Moderate		Major		Replace			$0	Cost/Flight
		Concrete		o	None		Minor		Moderate		Major		Replace			$0	Cost/Flight
	C2020 Stair Finishes	Concrete Fill		o	None		Minor		Moderate		Major		Replace			$0	Cost/Flight
		Resilient		o	None		Minor		Moderate		Major		Replace			$0	Cost/Flight
C30 Interior Finishes																	
	C3010 Wall Finishes	Paint on Masonry		o	None		Minor		Moderate		Major		Replace			$0	
		Wallboard		o	None		Minor		Moderate		Major		Replace			$0	
		Wainscot	100%		None	x	Minor		Moderate		Major		Replace		5%	$201	Prefabricated plastic laminate covered wall panels
		Ceramic Tile		o	None		Minor		Moderate		Major		Replace			$0	
	C3020 Floor Finishes	Carpet / Soft Surface	40%	x	None		Minor		Moderate		Major		Replace			$0	
		Resilient Tile	50%		None	x	Minor		Moderate		Major		Replace		5%	$50	
		Resilient Sheet	10%	x	None		Minor		Moderate		Major		Replace			$0	
		Polished Concrete		o	None		Minor		Moderate		Major		Replace			$0	
		Ceramic Tile		o	None		Minor		Moderate		Major		Replace			$0	
		Liquid Applied		o	None		Minor		Moderate		Major		Replace			$0	
		Wood Sports Floor		o	None		Minor		Moderate		Major		Replace			$0	
	C3030 Ceiling Finishes	Wallboard		o	None		Minor		Moderate		Major		Replace			$0	
		Lay-In Ceiling Tile	100%	x	None	x	Minor		Moderate		Major		Replace		5%	$100	
		Glued-Up Ceiling Tile		o	None		Minor		Moderate		Major		Replace			$0	
		Painted Structure		o	None		Minor		Moderate		Major		Replace			$0	
D SERVICES																	
D10 Conveying																	
	D1010 Elevators & Lifts		0		None		Minor		Moderate		Major		Replace			$0	
	D1020 Escalators & Moving Walks		0		None		Minor		Moderate		Major		Replace			$0	
	D1090 Other Conveying Systems		0		None		Minor		Moderate		Major		Replace			$0	
D20 Plumbing																	
	D2010 Plumbing Fixtures		10%		None		Minor		Moderate		Major	x	Replace		20%	$359	All (N) fixtures must meet ADA requirements by code.
	D2020 Domestic Water Distribution		10%	x	None		Minor		Moderate		Major		Replace			$0	
	D2030 Sanitary Waste		10%	x	None		Minor		Moderate		Major		Replace			$0	
	D2040 Rain Water Drainage		100%	x	None		Minor		Moderate		Major		Replace			$0	
	D2090 Other Plumbing Systems	NOT USED			None		Minor		Moderate		Major		Replace				
D30 HVAC																	
	D3010 Energy Supply		100%	x	None		Minor		Moderate		Major		Replace			$0	
	D3020 Heat Generating Systems	Boiler		o	None		Minor		Moderate		Major		Replace			$0	
		Air Handler		o	None		Minor		Moderate		Major		Replace			$0	
		Furnace		o	None		Minor		Moderate		Major		Replace			$0	
		Heat Exchanger		o	None		Minor		Moderate		Major		Replace			$0	
	D3030 Cooling Generating Systems	Component of air handler	100%	x	None		Minor		Moderate		Major		Replace			$0	
		Stand alone chiller		o	None		Minor		Moderate		Major		Replace			$0	
	D3040 Distribution Systems	Ductwork		o	None		Minor		Moderate		Major		Replace			$0	
		Hot water return & supply		o	None		Minor		Moderate		Major		Replace			$0	
	D3050 Terminal & Package Units	Above ceiling VAV unit		o	None		Minor		Moderate		Major		Replace			$0	
		In-room ventilator unit	100%	x	None		Minor		Moderate		Major		Replace			$0	

	In-room radiant unit		0	None		Minor		Moderate		Major		Replace		$0	
D3060 Controls & Instrumentation		100%	x	None		Minor		Moderate		Major		Replace		$0	
D3070 Systems Testing & Balancing		100%	x	None		Minor		Moderate		Major		Replace		$0	
D3090 Other HVAC Systems & Equipment	NOT USED			None		Minor		Moderate		Major		Replace			
D40 Fire Protection															
D4010 Sprinklers			o	None		Minor		Moderate		Major		Replace		$0	
D4020 Standpipes			o	None		Minor		Moderate		Major		Replace		$0	
D4030 Fire Protection Specialties		100%	x	None		Minor		Moderate		Major		Replace		$0	
D4090 Other Fire Protection Systems	NOT USED			None		Minor		Moderate		Major		Replace			
D50 Electrical															
D5010 Electrical Service & Distribution		100%	x	None		Minor		Moderate		Major		Replace		$0	
D5020 Lighting and Branch Wiring		100%	x	None		Minor		Moderate		Major		Replace		$0	
D5030 Communications & Security	Voice / Data System	100%	x	None		Minor		Moderate		Major		Replace		$0	
	Clock / Intercom System	100%	x	None		Minor		Moderate		Major		Replace		$0	
	Closed Circuit Surveillance	100%	x	None		Minor		Moderate		Major		Replace		$0	
	Access Control System		o	None		Minor		Moderate		Major		Replace		$0	
	Intrusion Alarm System	100%	x	None		Minor		Moderate		Major		Replace		$0	
	Fire Alarm / Detection	100%	x	None		Minor		Moderate		Major		Replace		$0	
	Lighting Control System	100%	x	None		Minor		Moderate		Major		Replace		$0	lights are on sensors
D5090 Other Electrical Systems	NOT USED			None		Minor		Moderate		Major		Replace			
E EQUIPMENT & FURNISHINGS															
E10 Equipment															
E1010 Commercial Equipment	Food Service		o	None		Minor		Moderate		Major		Replace		$0	
	Vocational		o	None		Minor		Moderate		Major		Replace		$0	
E1020 Institutional Equipment	Science		o	None		Minor		Moderate		Major		Replace		$0	
	Art		o	None		Minor		Moderate		Major		Replace		$0	
	Stage Performance		o	None		Minor		Moderate		Major		Replace		$0	Cost/SF of Stage Performance Area
	Restroom Accessories/Stalls	10%		None		Minor	X	Moderate		Major	X	Replace	50%	$324	
E1030 Vehicular Equipment	NOT USED			None		Minor		Moderate		Major		Replace			
E1090 Other Equipment	NOT USED			None		Minor		Moderate		Major		Replace			
E20 Furnishings															
E2010 Fixed Furnishings		5%	X	None		Minor		Moderate		Major		Replace	100%	$0	
E2020 Movable Furnishings		45%		None		Minor		Moderate		Major	X	Replace	10%	$2,155	
F SPECIAL CONSTRUCTION & DEMOLITION - NOT USED															
G BUILDING SITE WORK															
G10 Site Preparation	NOT USED														
G20 Site Improvements															
G2010 Roadways			o	None		Minor		Moderate		Major		Replace		$0	Cost/SF of surface area
G2020 Parking Lots			o	None		Minor		Moderate		Major		Replace		$0	Cost/SF of surface area
G2030 Pedestrian Paving			o	None		Minor		Moderate		Major		Replace		$0	Cost/SF of surface area
G2040 Site Development			o	None		Minor		Moderate		Major		Replace		$0	Cost/LF of fencing
G2050 Landscaping			o	None		Minor		Moderate		Major		Replace		$0	Cost/SF of irrigated area
G30 Site Mechanical Utilities															
G3010 Water Supply	Domestic	90	x	None		Minor		Moderate		Major		Replace		$0	Enter LF of pipe in cell E143
	Fire		o	None		Minor		Moderate		Major		Replace		$0	Enter LF of pipe in cell E144
G3020 Sanitary Sewer		90	x	None		Minor		Moderate		Major		Replace		$0	Enter LF of pipe in cell E145
G3030 Storm Sewer		90	x	None		Minor		Moderate		Major		Replace		$0	Enter SF of area to be drained
G3040 Heating Distribution			o	None		Minor		Moderate		Major		Replace		$0	Enter LF of pipe in cell E147
G3050 Cooling Distribution			o	None		Minor		Moderate		Major		Replace		$0	Enter LF of pipe in cell E148

Physical Condition Assessment

G3060 Fuel Distribution		90	x	None	Minor	Moderate	Major	Replace		$0	Enter LF of pipe in cell E149
G3090 Other Site Mechanical Utilities	NOT USED			None	Minor	Moderate	Major	Replace			
G40 Site Electrical Utilities											
G4010 Electrical Distribution	Service	100%	x	None	Minor	Moderate	Major	Replace		$0	
	Generator		o	None	Minor	Moderate	Major	Replace		$0	
G4020 Site Lighting		100%	x	None	Minor	Moderate	Major	Replace		$0	
G4030 Site Communications & Security		100%	x	None	Minor	Moderate	Major	Replace		$0	
G4090 Other Site Electrical Utilities	NOT USED			None	Minor	Moderate	Major	Replace			
G90 Other Site Construction	NOT USED										

OTHER

Description of System	Unit of Measure	Quantity	Unit Budget	Extended	Notes
				$0	
				$0	
				$0	
				$0	
				$0	
				$0	
				$0	

Physical Condition Budget Sub-Total	**$3,496**
Budgeted Development Costs	**$1,328**
Physical Condition Budget TOTAL	**$4,824**
Cost with Escalation to June 2021	**$5,499**
Cost with Escalation to June 2022	**$5,719**
Cost with Escalation to June 2023	**$5,948**
Replacement Budget	**$925,042**

Physical Condition Assessment

District Name: Gervais SD 1
Site Name: Preschool
Building Name: Main
Building ID: 21370401

REMINDER: FILL OUT ALL INFORMATION ON '*BASE INFORMATION SHEET*' BEFORE ENTERING DATA ON THIS SHEET

An unused cell or system that should not receive direct user input

An automatically populated cell from user input elsewhere in the file - do not overwrite

Level 1	Level 2	Level 3	Type (as applicable)	% of Building or Number		None		Minor		Moderate		Major		Replace as part of Renovation	% of System or Finish	Automated Budget Estimate	Notes
					LEVEL OF ACTION												
A SUBSTRUCTURE																	
	A10 Foundations																
		A1010 Standard Foundations		100%		None	x	Minor		Moderate		Major		Replace	100%	$998	Not sure. Covered by plywood, vented
		A1020 Special Foundations			o	None		Minor		Moderate		Major		Replace		$0	
		A1030 Slab on Grade			o	None		Minor		Moderate	x	Major		Replace	0%	$0	
	A20 Basement Construction																
		A2010 Basement Excavation	NOT USED			None		Minor		Moderate		Major		Replace			
		A2020 Basement Walls			o	None		Minor		Moderate		Major		Replace		$0	
B SHELL																	
	B10 Superstructure																
		B1010 Floor Construction	Wood	100%	x	None		Minor		Moderate		Major		Replace		$0	
			Steel		o	None		Minor		Moderate		Major		Replace		$0	
			Concrete		o	None		Minor		Moderate		Major		Replace		$0	
		B1020 Roof Construction	Wood	100%	x	None		Minor		Moderate		Major		Replace		$0	
			Steel		o	None		Minor		Moderate		Major		Replace		$0	
			Concrete		o	None		Minor		Moderate		Major		Replace		$0	
	B20 Exterior Enclosure																
		B2010 Exterior Walls	Concrete Formed / Tilt		o	None		Minor		Moderate		Major		Replace		$0	
			Masonry		o	None		Minor		Moderate		Major		Replace		$0	
			Framed w/ Wood Siding	100%		None		Minor	x	Moderate		Major		Replace	5%	$306	
			Framed w/Metal Panel		o	None		Minor		Moderate		Major		Replace		$0	
			Framed w/Stucco		o	None		Minor		Moderate		Major		Replace		$0	
			Framed w/Masonry Veneer		o	None		Minor		Moderate		Major		Replace		$0	
		B2020 Exterior Windows	Wood		o	None		Minor		Moderate		Major		Replace		$0	
			Aluminum/Steel		o	None		Minor		Moderate		Major		Replace		$0	
			Clad	100%		None		Minor	x	Moderate		Major		Replace	10%	$537	Vinyl windows
			Curtain Wall		o	None		Minor		Moderate		Major		Replace		$0	
		B2030 Exterior Doors	Wood		o	None		Minor		Moderate		Major		Replace		$0	
			Hollow Metal	4	x	None		Minor		Moderate		Major		Replace		$0	
			Storefront		o	None		Minor		Moderate		Major		Replace		$0	
	B30 Roofing																
		B3010 Roof Coverings	Asphalt Shingle	100%	x	None		Minor		Moderate		Major		Replace		$0	
			Built-Up		o	None		Minor		Moderate		Major		Replace		$0	
			Single Ply		o	None		Minor		Moderate		Major		Replace		$0	
			Metal		o	None		Minor		Moderate		Major		Replace		$0	
			Concrete Tile		o	None		Minor		Moderate		Major		Replace		$0	
		B3020 Roof Openings	Skylights		o	None		Minor		Moderate		Major		Replace		$0	By Building GSF
			Access Hatch		o	None		Minor		Moderate		Major		Replace		$0	Per hatch
C INTERIORS																	
	C10 Interior Construction																
		C1010 Partitions	Framed	100%	x	None		Minor		Moderate		Major		Replace		$0	

		Masonry		o	None		Minor		Moderate		Major		Replace			$0	
	C1020 Interior Doors	Wood	1	X	None		Minor		Moderate		Major		Replace			$0	
		Hollow Metal		o	None		Minor		Moderate		Major		Replace			$0	
	C1030 Fittings	NOT USED			None		Minor		Moderate		Major		Replace				
C20 Stairs																	
	C2010 Stair Construction	Wood		o	None		Minor		Moderate		Major		Replace			$0	Cost/Flight
		Metal		o	None		Minor		Moderate		Major		Replace			$0	Cost/Flight
		Concrete		o	None		Minor		Moderate		Major		Replace			$0	Cost/Flight
	C2020 Stair Finishes	Concrete Fill		o	None		Minor		Moderate		Major		Replace			$0	Cost/Flight
		Resilient		o	None		Minor		Moderate		Major		Replace			$0	Cost/Flight
C30 Interior Finishes																	
	C3010 Wall Finishes	Paint on Masonry		o	None		Minor		Moderate		Major		Replace			$0	
		Wallboard		o	None		Minor		Moderate		Major		Replace			$0	
		Wainscot	100%		None	x	Minor		Moderate		Major		Replace	100%		$4,030	Prefabricated plastic laminate covered wall panels
		Ceramic Tile		o	None		Minor		Moderate		Major		Replace			$0	
	C3020 Floor Finishes	Carpet / Soft Surface	90%		None		Minor		Moderate		Major	x	Replace	50%		$5,997	
		Resilient Tile		o	None		Minor		Moderate		Major		Replace			$0	
		Resilient Sheet	10%	X	None		Minor		Moderate		Major		Replace	100%		$0	
		Polished Concrete		o	None		Minor		Moderate		Major		Replace			$0	
		Ceramic Tile		o	None		Minor		Moderate		Major		Replace			$0	
		Liquid Applied		o	None		Minor		Moderate		Major		Replace			$0	
		Wood Sports Floor		o	None		Minor		Moderate		Major		Replace			$0	
	C3030 Ceiling Finishes	Wallboard		o	None		Minor		Moderate		Major		Replace			$0	
		Lay-In Ceiling Tile	100%		None	X	Minor		Moderate		Major		Replace	10%		$200	
		Glued-Up Ceiling Tile		o	None		Minor		Moderate		Major		Replace			$0	
		Painted Structure		o	None		Minor		Moderate		Major		Replace			$0	
D SERVICES																	
D10 Conveying																	
	D1010 Elevators & Lifts			o	None		Minor		Moderate		Major		Replace			$0	
	D1020 Escalators & Moving Walks			o	None		Minor		Moderate		Major		Replace			$0	
	D1090 Other Conveying Systems			o	None		Minor		Moderate		Major		Replace			$0	
D20 Plumbing																	
	D2010 Plumbing Fixtures		10%	x	None		Minor		Moderate		Major		Replace			$0	All (N) fixtures must meet ADA requirements by code.
	D2020 Domestic Water Distribution		10%	x	None		Minor		Moderate		Major		Replace			$0	
	D2030 Sanitary Waste		10%	x	None		Minor		Moderate		Major		Replace			$0	
	D2040 Rain Water Drainage		100%	x	None		Minor		Moderate		Major		Replace			$0	
	D2090 Other Plumbing Systems	NOT USED			None		Minor		Moderate		Major		Replace				
D30 HVAC																	
	D3010 Energy Supply		100%	x	None		Minor		Moderate		Major		Replace			$0	
	D3020 Heat Generating Systems	Boiler		o	None		Minor		Moderate		Major		Replace			$0	
		Air Handler		o	None		Minor		Moderate		Major		Replace			$0	
		Furnace		o	None		Minor		Moderate		Major		Replace			$0	
		Heat Exchanger		o	None		Minor		Moderate		Major		Replace			$0	
	D3030 Cooling Generating Systems	Component of air handler	100%	x	None		Minor		Moderate		Major		Replace			$0	
		Stand alone chiller		o	None		Minor		Moderate		Major		Replace			$0	
	D3040 Distribution Systems	Ductwork		o	None		Minor		Moderate		Major		Replace			$0	
		Hot water return & supply		o	None		Minor		Moderate		Major		Replace			$0	
	D3050 Terminal & Package Units	Above ceiling VAV unit		o	None		Minor		Moderate		Major		Replace			$0	
		In-room ventilator unit	100%	x	None		Minor		Moderate		Major		Replace			$0	

		In-room radiant unit		o	None	Minor	Moderate	Major	Replace		$0	
	D3060 Controls & Instrumentation		100%	x	None	Minor	Moderate	Major	Replace		$0	
	D3070 Systems Testing & Balancing		100%	x	None	Minor	Moderate	Major	Replace		$0	
	D3090 Other HVAC Systems & Equipment	NOT USED			None	Minor	Moderate	Major	Replace			
	D40 Fire Protection											
	D4010 Sprinklers			o	None	Minor	Moderate	Major	Replace		$0	
	D4020 Standpipes			o	None	Minor	Moderate	Major	Replace		$0	
	D4030 Fire Protection Specialties		100%	x	None	Minor	Moderate	Major	Replace		$0	
	D4090 Other Fire Protection Systems	NOT USED			None	Minor	Moderate	Major	Replace			
	D50 Electrical											
	D5010 Electrical Service & Distribution		100%	x	None	Minor	Moderate	Major	Replace		$0	
	D5020 Lighting and Branch Wiring		100%	x	None	Minor	Moderate	Major	Replace		$0	
	D5030 Communications & Security	Voice / Data System	100%	x	None	Minor	Moderate	Major	Replace		$0	
		Clock / Intercom System	100%	x	None	Minor	Moderate	Major	Replace		$0	
		Closed Circuit Surveillance	100%	x	None	Minor	Moderate	Major	Replace		$0	
		Access Control System		o	None	Minor	Moderate	Major	Replace		$0	
		Intrusion Alarm System	100%	x	None	Minor	Moderate	Major	Replace		$0	
		Fire Alarm / Detection	100%	x	None	Minor	Moderate	Major	Replace		$0	
		Lighting Control System	100%	x	None	Minor	Moderate	Major	Replace		$0	
	D5090 Other Electrical Systems	NOT USED			None	Minor	Moderate	Major	Replace			
E	**EQUIPMENT & FURNISHINGS**											
	E10 Equipment											
	E1010 Commercial Equipment	Food Service		o	None	Minor	Moderate	Major	Replace		$0	
		Vocational		o	None	Minor	Moderate	Major	Replace		$0	
	E1020 Institutional Equipment	Science		o	None	Minor	Moderate	Major	Replace		$0	
		Art		o	None	Minor	Moderate	Major	Replace		$0	
		Stage Performance		o	None	Minor	Moderate	Major	Replace		$0	Cost/SF of Stage Performance Area
		Restroom Accessories/Stalls	5%	x	None	Minor	Moderate	Major	Replace		$0	
	E1030 Vehicular Equipment	NOT USED			None	Minor	Moderate	Major	Replace			
	E1090 Other Equipment	NOT USED			None	Minor	Moderate	Major	Replace			
	E20 Furnishings											
	E2010 Fixed Furnishings		10%		None	x Minor	Moderate	Major	Replace	20%	$55	
	E2020 Movable Furnishings		45%		None	Minor	Moderate	Major	x Replace	20%	$4,309	
F	**SPECIAL CONSTRUCTION & DEMOLITION - NOT USED**											
G	**BUILDING SITE WORK**											
	G10 Site Preparation	NOT USED										
	G20 Site Improvements											
	G2010 Roadways			o	None	Minor	Moderate	Major	Replace		$0	Cost/SF of surface area
	G2020 Parking Lots			o	None	Minor	Moderate	Major	Replace		$0	Cost/SF of surface area
	G2030 Pedestrian Paving			o	None	Minor	Moderate	Major	Replace		$0	Cost/SF of surface area
	G2040 Site Development			o	None	Minor	Moderate	Major	Replace		$0	Cost/LF of fencing
	G2050 Landscaping			o	None	Minor	Moderate	Major	Replace		$0	Cost/SF of irrigated area
	G30 Site Mechanical Utilities											
	G3010 Water Supply	Domestic	90	x	None	Minor	Moderate	Major	Replace		$0	Enter LF of pipe in cell E143
		Fire		o	None	Minor	Moderate	Major	Replace		$0	Enter LF of pipe in cell E144
	G3020 Sanitary Sewer		90	x	None	Minor	Moderate	Major	Replace		$0	Enter LF of pipe in cell E145
	G3030 Storm Sewer		90	x	None	Minor	Moderate	Major	Replace		$0	Enter SF of area to be drained
	G3040 Heating Distribution			o	None	Minor	Moderate	Major	Replace		$0	Enter LF of pipe in cell E147
	G3050 Cooling Distribution			o	None	Minor	Moderate	Major	Replace		$0	Enter LF of pipe in cell E148

Physical Condition Assessment

G3060 Fuel Distribution		90	x	None	Minor	Moderate	Major	Replace		$0	Enter LF of pipe in cell E149
G3090 Other Site Mechanical Utilities	NOT USED			None	Minor	Moderate	Major	Replace			
G40 Site Electrical Utilities											
G4010 Electrical Distribution	Service	100%	x	None	Minor	Moderate	Major	Replace		$0	
	Generator		o	None	Minor	Moderate	Major	Replace		$0	
G4020 Site Lighting		100%	x	None	Minor	Moderate	Major	Replace		$0	
G4030 Site Communications & Security		100%	x	None	Minor	Moderate	Major	Replace		$0	
G4090 Other Site Electrical Utilities	NOT USED			None	Minor	Moderate	Major	Replace			
G90 Other Site Construction	NOT USED										

OTHER

Description of System	Unit of Measure	Quantity	Unit Budget	Extended	Notes
				$0	
				$0	
				$0	
				$0	
				$0	
				$0	
				$0	

Physical Condition Budget Sub-Total	**$16,431**
Budgeted Development Costs	**$6,244**
Physical Condition Budget TOTAL	**$22,675**
Cost with Escalation to June 2021	**$25,850**
Cost with Escalation to June 2022	**$26,884**
Cost with Escalation to June 2023	**$27,959**
Replacement Budget	**$925,042**

Base Information Sheet

Item	Data	Notes / Explanation
District Name:	Gervais SD 1	Pull-down menu of the 197 Districts
Site Name:	Daycare	Typically the name that is used for the facility / campus
Building Name:	Main	If only one building on site, refer to "main"
Building ID:	21370001	Please use the same ID that is assigned to this building in the annual Building Collection.
Building Type:	Other Commercial	Pull-down menu - feeds FCI calculation
Physical Address of Building:	290 First Street	Informational only - does not link
Original Year of Building Completion	1992	When was the original building completed and ready for use
Original Construction Type	Pre-fab wood frame	What type of construction was used to complete original building
Describe Other Construction Type		If you choose other construction type please describe here
County:	Marion	Pull-down menu of the 36 counties - sets location factor for budgets
Gross Square Footage:	1,750	Calculated from exterior face of walls (excluding eaves, outbuilding, porches, canopies, and similar)
Site Acreage:	0.5	District records
Assessor Company:	IBI Group	Certified company
Assessor Name:	Steve Winkle, Kate Barbaria	For follow up questions
Contact (Phone):	503-273-9192	
Contact (E-Mail):	steve.winkle@ibigroup.com	
Date of Assessment:	October 09-10, 2019	Might reference back for inflation calculation (future)

*Building ID Format: Located in ODE "Buildings Collection" database

Physical Condition Assessment

District Name: Gervais SD 1
Site Name: Daycare
Building Name: Main
Building ID: 21370001

REMINDER: FILL OUT ALL INFORMATION ON '*BASE INFORMATION SHEET*' BEFORE ENTERING DATA ON THIS SHEET

An unused cell or system that should not receive direct user input

An automatically populated cell from user input elsewhere in the file - do not overwrite

Level 1	Level 2	Level 3	Type (as applicable)	% of Building or Number	LEVEL OF ACTION												Replace as part of Renovation	% of System or Finish	Automated Budget Estimate	Notes
						None		Minor		Moderate		Major								
A SUBSTRUCTURE																				
	A10 Foundations																			
		A1010 Standard Foundations		100%		None	x	Minor		Moderate		Major		Replace	5%	$50				
		A1020 Special Foundations			o	None		Minor		Moderate		Major		Replace		$0				
		A1030 Slab on Grade			o	None		Minor		Moderate		Major		Replace		$0				
	A20 Basement Construction																			
		A2010 Basement Excavation	NOT USED			None		Minor		Moderate		Major		Replace						
		A2020 Basement Walls			o	None		Minor		Moderate		Major		Replace		$0				
B SHELL																				
	B10 Superstructure																			
		B1010 Floor Construction	Wood	100%	x	None		Minor		Moderate		Major		Replace		$0				
			Steel		o	None		Minor		Moderate		Major		Replace		$0				
			Concrete		o	None		Minor		Moderate		Major		Replace		$0				
		B1020 Roof Construction	Wood	100%	x	None		Minor		Moderate		Major		Replace		$0				
			Steel		o	None		Minor		Moderate		Major		Replace		$0				
			Concrete		o	None		Minor		Moderate		Major		Replace		$0				
	B20 Exterior Enclosure																			
		B2010 Exterior Walls	Concrete Formed / Tilt		o	None		Minor		Moderate		Major		Replace		$0				
			Masonry		o	None		Minor		Moderate		Major		Replace		$0				
			Framed w/ Wood Siding	100%		None		Minor	x	Moderate		Major		Replace	5%	$306				Hardie panel siding
			Framed w/Metal Panel		o	None		Minor		Moderate		Major		Replace		$0				
			Framed w/Stucco		o	None		Minor		Moderate		Major		Replace		$0				
			Framed w/Masonry Veneer		o	None		Minor		Moderate		Major		Replace		$0				
		B2020 Exterior Windows	Wood		o	None		Minor		Moderate		Major		Replace		$0				
			Aluminum/Steel		o	None		Minor		Moderate		Major		Replace		$0				
			Clad	100%	x	None		Minor		Moderate		Major		Replace		$0				
			Curtain Wall		o	None		Minor		Moderate		Major		Replace		$0				
		B2030 Exterior Doors	Wood	2	x	None		Minor		Moderate		Major		Replace		$0				
			Hollow Metal		o	None		Minor		Moderate		Major		Replace		$0				
			Storefront		o	None		Minor		Moderate		Major		Replace		$0				
	B30 Roofing																			
		B3010 Roof Coverings	Asphalt Shingle		o	None		Minor		Moderate		Major		Replace		$0				
			Built-Up		o	None		Minor		Moderate		Major		Replace		$0				
			Single Ply		o	None		Minor		Moderate		Major		Replace		$0				
			Metal	100%	x	None		Minor		Moderate		Major		Replace		$0				
			Concrete Tile		o	None		Minor		Moderate		Major		Replace		$0				
		B3020 Roof Openings	Skylights		o	None		Minor		Moderate		Major		Replace		$0				By Building GSF
			Access Hatch		o	None		Minor		Moderate		Major		Replace		$0				Per hatch
C INTERIORS																				
	C10 Interior Construction																			
		C1010 Partitions	Framed	100%	X	None		Minor		Moderate		Major		Replace		$0				

		Masonry		o	None		Minor		Moderate		Major		Replace		$0	
	C1020 Interior Doors	Wood	7		None		Minor	X	Moderate		Major		Replace	5%	$319	
		Hollow Metal		o	None		Minor		Moderate		Major		Replace		$0	
	C1030 Fittings	NOT USED			None		Minor		Moderate		Major		Replace			
C20 Stairs																
	C2010 Stair Construction	Wood		o	None		Minor		Moderate		Major		Replace		$0	Cost/Flight
		Metal		o	None		Minor		Moderate		Major		Replace		$0	Cost/Flight
		Concrete		o	None		Minor		Moderate		Major		Replace		$0	Cost/Flight
	C2020 Stair Finishes	Concrete Fill		o	None		Minor		Moderate		Major		Replace		$0	Cost/Flight
		Resilient		o	None		Minor		Moderate		Major		Replace		$0	Cost/Flight
C30 Interior Finishes																
	C3010 Wall Finishes	Paint on Masonry		o	None		Minor		Moderate		Major		Replace		$0	
		Wallboard		o	None		Minor		Moderate		Major		Replace		$0	
		Wainscot	100%		None	X	Minor		Moderate		Major		Replace	15%	$604	Prefabricated plastic laminate wall panels throughout
		Ceramic Tile		o	None		Minor		Moderate		Major		Replace		$0	
	C3020 Floor Finishes	Carpet / Soft Surface	85%		None		Minor		Moderate		Major	x	Replace	5%	$566	
		Resilient Tile		o	None		Minor		Moderate		Major		Replace		$0	
		Resilient Sheet	15%	x	None		Minor		Moderate		Major		Replace	100%	$0	
		Polished Concrete		o	None		Minor		Moderate		Major		Replace		$0	
		Ceramic Tile		o	None		Minor		Moderate		Major		Replace		$0	
		Liquid Applied		o	None		Minor		Moderate		Major		Replace		$0	
		Wood Sports Floor		o	None		Minor		Moderate		Major		Replace		$0	
	C3030 Ceiling Finishes	Wallboard		o	None		Minor		Moderate		Major		Replace		$0	
		Lay-In Ceiling Tile	100%		None	x	Minor		Moderate		Major		Replace	2%	$40	
		Glued-Up Ceiling Tile		o	None		Minor		Moderate		Major		Replace		$0	
		Painted Structure		o	None		Minor		Moderate		Major		Replace		$0	
D SERVICES																
D10 Conveying																
	D1010 Elevators & Lifts			o	None		Minor		Moderate		Major		Replace		$0	
	D1020 Escalators & Moving Walks			o	None		Minor		Moderate		Major		Replace		$0	
	D1090 Other Conveying Systems			o	None		Minor		Moderate		Major		Replace		$0	
D20 Plumbing																
	D2010 Plumbing Fixtures		15%	x	None		Minor		Moderate		Major		Replace		$0	All (N) fixtures must meet ADA requirements by code.
	D2020 Domestic Water Distribution		15%	x	None		Minor		Moderate		Major		Replace		$0	
	D2030 Sanitary Waste		15%	x	None		Minor		Moderate		Major		Replace		$0	
	D2040 Rain Water Drainage		100%	x	None		Minor		Moderate		Major		Replace		$0	
	D2090 Other Plumbing Systems	NOT USED			None		Minor		Moderate		Major		Replace			
D30 HVAC																
	D3010 Energy Supply		100%	x	None		Minor		Moderate		Major		Replace		$0	
	D3020 Heat Generating Systems	Boiler		o	None		Minor		Moderate		Major		Replace		$0	
		Air Handler		o	None		Minor		Moderate		Major		Replace		$0	
		Furnace		o	None		Minor		Moderate		Major		Replace		$0	
		Heat Exchanger		o	None		Minor		Moderate		Major		Replace		$0	
	D3030 Cooling Generating Systems	Component of air handler	100%	x	None		Minor		Moderate		Major		Replace		$0	
		Stand alone chiller		o	None		Minor		Moderate		Major		Replace		$0	
	D3040 Distribution Systems	Ductwork		o	None		Minor		Moderate		Major		Replace		$0	
		Hot water return & supply		o	None		Minor		Moderate		Major		Replace		$0	
	D3050 Terminal & Package Units	Above ceiling VAV unit		o	None		Minor		Moderate		Major		Replace		$0	
		In-room ventilator unit	100%	x	None		Minor		Moderate		Major		Replace		$0	

	In-room radiant unit		o	None		Minor		Moderate		Major		Replace		$0	
D3060 Controls & Instrumentation		100%	x	None		Minor		Moderate		Major		Replace		$0	
D3070 Systems Testing & Balancing		100%	x	None		Minor		Moderate		Major		Replace		$0	
D3090 Other HVAC Systems & Equipment	NOT USED			None		Minor		Moderate		Major		Replace			
D40 Fire Protection															
D4010 Sprinklers			o	None		Minor		Moderate		Major		Replace		$0	
D4020 Standpipes			o	None		Minor		Moderate		Major		Replace		$0	
D4030 Fire Protection Specialties		100%	x	None		Minor		Moderate		Major		Replace		$0	
D4090 Other Fire Protection Systems	NOT USED			None		Minor		Moderate		Major		Replace			
D50 Electrical															
D5010 Electrical Service & Distribution		100%	x	None		Minor		Moderate		Major		Replace		$0	
D5020 Lighting and Branch Wiring		100%	x	None		Minor		Moderate		Major		Replace		$0	
D5030 Communications & Security	Voice / Data System	100%	x	None		Minor		Moderate		Major		Replace		$0	
	Clock / Intercom System	100%	x	None		Minor		Moderate		Major		Replace		$0	
	Closed Circuit Surveillance	100%	x	None		Minor		Moderate		Major		Replace		$0	
	Access Control System		o	None		Minor		Moderate		Major		Replace		$0	
	Intrusion Alarm System	100%	x	None		Minor		Moderate		Major		Replace		$0	
	Fire Alarm / Detection	100%	x	None		Minor		Moderate		Major		Replace		$0	
	Lighting Control System	100%	x	None		Minor		Moderate		Major		Replace		$0	
D5090 Other Electrical Systems	NOT USED			None		Minor		Moderate		Major		Replace			
E EQUIPMENT & FURNISHINGS															
E10 Equipment															
E1010 Commercial Equipment	Food Service		o	None		Minor		Moderate		Major		Replace		$0	
	Vocational		o	None		Minor		Moderate		Major		Replace		$0	
E1020 Institutional Equipment	Science		o	None		Minor		Moderate		Major		Replace		$0	
	Art		o	None		Minor		Moderate		Major		Replace		$0	
	Stage Performance		o	None		Minor		Moderate		Major		Replace		$0	Cost/SF of Stage Performance Area
	Restroom Accessories/Stalls	5%		None		Minor		Moderate		Major	x	Replace	100%	$198	Equipment and accessories are not appropriate for age group
E1030 Vehicular Equipment	NOT USED			None		Minor		Moderate		Major		Replace			
E1090 Other Equipment	NOT USED			None		Minor		Moderate		Major		Replace			
E20 Furnishings															
E2010 Fixed Furnishings		8%		None		Minor	x	Moderate		Major		Replace	15%	$56	
E2020 Movable Furnishings		25%		None		Minor		Moderate		Major	x	Replace	10%	$1,197	
F SPECIAL CONSTRUCTION & DEMOLITION - NOT USED															
G BUILDING SITE WORK															
G10 Site Preparation	NOT USED														
G20 Site Improvements															
G2010 Roadways		3200		None		Minor		Moderate		Major	x	Replace	100%	$29,184	Cost/SF of surface area
G2020 Parking Lots		10200		None		Minor		Moderate		Major	x	Replace	66%	$61,396	Cost/SF of surface area
G2030 Pedestrian Paving			o	None		Minor		Moderate		Major		Replace		$0	Cost/SF of surface area
G2040 Site Development		140	x	None		Minor		Moderate		Major		Replace		$0	Cost/LF of fencing
G2050 Landscaping		2800	x	None		Minor		Moderate		Major		Replace		$0	Cost/SF of irrigated area
G30 Site Mechanical Utilities															
G3010 Water Supply	Domestic	90	x	None		Minor		Moderate		Major		Replace		$0	Enter LF of pipe in cell E143
	Fire		o	None		Minor		Moderate		Major		Replace		$0	Enter LF of pipe in cell E144
G3020 Sanitary Sewer		90	x	None		Minor		Moderate		Major		Replace		$0	Enter LF of pipe in cell E145
G3030 Storm Sewer		90	x	None		Minor		Moderate		Major		Replace		$0	Enter SF of area to be drained
G3040 Heating Distribution			o	None		Minor		Moderate		Major		Replace		$0	Enter LF of pipe in cell E147

G3050 Cooling Distribution			o	None	Minor	Moderate	Major	Replace		$0	Enter LF of pipe in cell E148
G3060 Fuel Distribution		90	x	None	Minor	Moderate	Major	Replace		$0	Enter LF of pipe in cell E149
G3090 Other Site Mechanical Utilities	NOT USED			None	Minor	Moderate	Major	Replace			
G40 Site Electrical Utilities											
G4010 Electrical Distribution	Service	100%	x	None	Minor	Moderate	Major	Replace		$0	
	Generator		o	None	Minor	Moderate	Major	Replace		$0	
G4020 Site Lighting		100%	x	None	Minor	Moderate	Major	Replace		$0	
G4030 Site Communications & Security		100%	x	None	Minor	Moderate	Major	Replace		$0	
G4090 Other Site Electrical Utilities	NOT USED			None	Minor	Moderate	Major	Replace			
G90 Other Site Construction	NOT USED										

OTHER

Description of System	Unit of Measure	Quantity	Unit Budget	Extended	Notes
				$0	
				$0	
				$0	
				$0	
				$0	
				$0	
				$0	

Physical Condition Budget Sub-Total	**$93,917**
Budgeted Development Costs	**$35,688**
Physical Condition Budget TOTAL	**$129,605**
Cost with Escalation to June 2021	**$147,750**
Cost with Escalation to June 2022	**$153,660**
Cost with Escalation to June 2023	**$159,806**
Replacement Budget	**$925,042**

Base Information Sheet

Item	Data	Notes / Explanation
District Name:	Gervais SD 1	Pull-down menu of the 197 Districts
Site Name:	Samuel Brown Academy	Typically the name that is used for the facility / campus
Building Name:	Main	If only one building on site, refer to "main"
Building ID:	21370400	Please use the same ID that is assigned to this building in the annual Building Collection.
Building Type:	High School	Pull-down menu - feeds FCI calculation
Physical Address of Building:	300 E Douglas Ave.	Informational only - does not link
Original Year of Building Completion	1995	When was the original building completed and ready for use
Original Construction Type	Pre-fab wood frame	What type of construction was used to complete original building
Describe Other Construction Type		If you choose other construction type please describe here
County:	Marion	Pull-down menu of the 36 counties - sets location factor for budgets
Gross Square Footage:	1,452	Calculated from exterior face of walls (excluding eaves, outbuilding, porches, canopies, and similar)
Site Acreage:	0.15	District records
Assessor Company:	IBI Group	Certified company
Assessor Name:	Steve Winkle, Kate Barbaria	For follow up questions
Contact (Phone):	503-273-9192	
Contact (E-Mail):	steve.winkle@ibigroup.com	
Date of Assessment:	October 09-10, 2019	Might reference back for inflation calculation (future)

*Building ID Format: Located in ODE "Buildings Collection" database

District Name: Gervais SD 1
Site Name: Samuel Brown Academy
Building Name: Main
Building ID: 21370400

REMINDER: FILL OUT ALL INFORMATION ON '*BASE INFORMATION SHEET*' BEFORE ENTERING DATA ON THIS SHEET

An unused cell or system that should not receive direct user input

An automatically populated cell from user input elsewhere in the file - do not overwrite

Level 1	Level 2	Level 3	Type (as applicable)	% of Building or Number		None		Minor		Moderate		Major		Replace as part of Renovation	% of System or Finish	Automated Budget Estimate	Notes
					LEVEL OF ACTION												
A SUBSTRUCTURE																	
	A10 Foundations																
		A1010 Standard Foundations		100%		None	x	Minor		Moderate		Major		Replace	10%	$83	Unable to observe foundation. Base of building wrapped in vented plywood skirt
		A1020 Special Foundations			o	None		Minor		Moderate		Major		Replace		$0	
		A1030 Slab on Grade			o	None		Minor		Moderate		Major		Replace		$0	
	A20 Basement Construction																
		A2010 Basement Excavation	NOT USED			None		Minor		Moderate		Major		Replace			
		A2020 Basement Walls			o	None		Minor		Moderate		Major		Replace		$0	
B SHELL																	
	B10 Superstructure																
		B1010 Floor Construction	Wood	100%		None		Minor		Moderate		Major	x	Replace	5%	$3,559	Floor sags and bounces throughout, indicating a failing floor deck
			Steel		o	None		Minor		Moderate		Major		Replace		$0	
			Concrete		o	None		Minor		Moderate		Major		Replace		$0	
		B1020 Roof Construction	Wood	100%	x	None		Minor		Moderate		Major		Replace		$0	
			Steel		o	None		Minor		Moderate		Major		Replace		$0	
			Concrete		o	None		Minor		Moderate		Major		Replace		$0	
	B20 Exterior Enclosure																
		B2010 Exterior Walls	Concrete Formed / Tilt		o	None		Minor		Moderate		Major		Replace		$0	
			Masonry		o	None		Minor		Moderate		Major		Replace		$0	
			Framed w/ Wood Siding	100%		None		Minor		Moderate	x	Major		Replace	10%	$963	Some wood siding appears water damaged at base, while other areas are showing wear, perhaps due to sprinklers or other irrigation hitting the siding on a regular basis
			Framed w/Metal Panel		o	None		Minor		Moderate		Major		Replace		$0	
			Framed w/Stucco		o	None		Minor		Moderate		Major		Replace		$0	
			Framed w/Masonry Veneer		o	None		Minor		Moderate		Major		Replace		$0	
		B2020 Exterior Windows	Wood		o	None		Minor		Moderate		Major		Replace		$0	
			Aluminum/Steel	100%		None		Minor		Moderate	x	Major		Replace	25%	$1,577	Evidence of water intrusion on interior sills of some windows. Locking mechanisms appear damaged. Faculty reported strong drafts through windows in cold weather.
			Clad		o	None		Minor		Moderate		Major		Replace		$0	
			Curtain Wall		o	None		Minor		Moderate		Major		Replace		$0	
		B2030 Exterior Doors	Wood		o	None		Minor		Moderate		Major		Replace		$0	
			Hollow Metal	2	x	None		Minor		Moderate		Major		Replace	100%	$0	
			Storefront		o	None		Minor		Moderate		Major		Replace		$0	
	B30 Roofing																
		B3010 Roof Coverings	Asphalt Shingle	100%	x	None		Minor		Moderate		Major		Replace		$0	
			Built-Up	0%		None		Minor		Moderate		Major		Replace		$0	

		Single Ply	0%		None		Minor		Moderate		Major		Replace		$0	
		Metal	0%		None		Minor		Moderate		Major		Replace		$0	
		Concrete Tile	0%		None		Minor		Moderate		Major		Replace		$0	
	B3020 Roof Openings	Skylights	0%		None		Minor		Moderate		Major		Replace		$0	By Building GSF
		Access Hatch	0		None		Minor		Moderate		Major		Replace		$0	Per hatch
C INTERIORS																
C10 Interior Construction																
	C1010 Partitions	Framed	100%	x	None		Minor		Moderate		Major		Replace		$0	
		Masonry		o	None		Minor		Moderate		Major		Replace		$0	
	C1020 Interior Doors	Wood	4	x	None		Minor		Moderate		Major		Replace		$0	
		Hollow Metal		o	None		Minor		Moderate		Major		Replace		$0	
	C1030 Fittings	NOT USED			None		Minor		Moderate		Major		Replace			
C20 Stairs																
	C2010 Stair Construction	Wood		o	None		Minor		Moderate		Major		Replace		$0	Cost/Flight
		Metal		o	None		Minor		Moderate		Major		Replace		$0	Cost/Flight
		Concrete		o	None		Minor		Moderate		Major		Replace		$0	Cost/Flight
	C2020 Stair Finishes	Concrete Fill		o	None		Minor		Moderate		Major		Replace		$0	Cost/Flight
		Resilient		o	None		Minor		Moderate		Major		Replace		$0	Cost/Flight
C30 Interior Finishes																
	C3010 Wall Finishes	Paint on Masonry		o	None		Minor		Moderate		Major		Replace		$0	
		Wallboard		o	None		Minor		Moderate		Major		Replace		$0	
		Wainscot	100%	x	None		Minor		Moderate		Major		Replace		$0	
		Ceramic Tile		o	None		Minor		Moderate		Major		Replace		$0	
	C3020 Floor Finishes	Carpet / Soft Surface	85%		None		Minor		Moderate		Major	x	Replace	5%	$470	Carpet is worn throughout, but not stained or pulling up
		Resilient Tile	15%	x	None		Minor		Moderate		Major		Replace		$0	
		Resilient Sheet		o	None		Minor		Moderate		Major		Replace		$0	
		Polished Concrete		o	None		Minor		Moderate		Major		Replace		$0	
		Ceramic Tile		o	None		Minor		Moderate		Major		Replace		$0	
		Liquid Applied		o	None		Minor		Moderate		Major		Replace		$0	
		Wood Sports Floor		o	None		Minor		Moderate		Major		Replace		$0	
	C3030 Ceiling Finishes	Wallboard		o	None		Minor		Moderate		Major		Replace		$0	
		Lay-In Ceiling Tile	100%		None	x	Minor		Moderate		Major		Replace	15%	$248	
		Glued-Up Ceiling Tile		o	None		Minor		Moderate		Major		Replace		$0	
		Painted Structure		o	None		Minor		Moderate		Major		Replace		$0	
D SERVICES																
D10 Conveying																
	D1010 Elevators & Lifts			o	None		Minor		Moderate		Major		Replace		$0	
	D1020 Escalators & Moving Walks			o	None		Minor		Moderate		Major		Replace		$0	
	D1090 Other Conveying Systems			o	None		Minor		Moderate		Major		Replace		$0	
D20 Plumbing																
	D2010 Plumbing Fixtures		10%	x	None		Minor		Moderate		Major		Replace		$0	All (N) fixtures must meet ADA requirements by code.
	D2020 Domestic Water Distribution		10%	x	None		Minor		Moderate		Major		Replace		$0	
	D2030 Sanitary Waste		10%	x	None		Minor		Moderate		Major		Replace		$0	
	D2040 Rain Water Drainage		100%	x	None		Minor		Moderate		Major		Replace		$0	
	D2090 Other Plumbing Systems	NOT USED			None		Minor		Moderate		Major		Replace			
D30 HVAC																
	D3010 Energy Supply		100%	x	None		Minor		Moderate		Major		Replace		$0	
	D3020 Heat Generating Systems	Boiler		o	None		Minor		Moderate		Major		Replace		$0	
		Air Handler		o	None		Minor		Moderate		Major		Replace		$0	

	Furnace		o	None		Minor		Moderate		Major		Replace		$0	
	Heat Exchanger		o	None		Minor		Moderate		Major		Replace		$0	
D3030 Cooling Generating Systems	Component of air handler	100%	x	None		Minor		Moderate		Major		Replace		$0	
	Stand alone chiller		o	None		Minor		Moderate		Major		Replace		$0	
D3040 Distribution Systems	Ductwork		o	None		Minor		Moderate		Major		Replace		$0	
	Hot water return & supply		o	None		Minor		Moderate		Major		Replace		$0	
D3050 Terminal & Package Units	Above ceiling VAV unit		o	None		Minor		Moderate		Major		Replace		$0	
	In-room ventilator unit	100%	x	None		Minor		Moderate		Major		Replace		$0	
	In-room radiant unit		o	None		Minor		Moderate		Major		Replace		$0	
D3060 Controls & Instrumentation		100%	x	None		Minor		Moderate		Major		Replace		$0	
D3070 Systems Testing & Balancing		100%	x	None		Minor		Moderate		Major		Replace		$0	
D3090 Other HVAC Systems & Equipment	NOT USED			None		Minor		Moderate		Major		Replace			
D40 Fire Protection															
D4010 Sprinklers			o	None		Minor		Moderate		Major		Replace		$0	
D4020 Standpipes			o	None		Minor		Moderate		Major		Replace		$0	
D4030 Fire Protection Specialties			o	None		Minor		Moderate		Major		Replace		$0	
D4090 Other Fire Protection Systems	NOT USED			None		Minor		Moderate		Major		Replace			
D50 Electrical															
D5010 Electrical Service & Distribution		100%	x	None		Minor		Moderate		Major		Replace		$0	
D5020 Lighting and Branch Wiring		100%	x	None		Minor		Moderate		Major		Replace		$0	
D5030 Communications & Security	Voice / Data System	100%	x	None		Minor		Moderate		Major		Replace		$0	
	Clock / Intercom System	100%	x	None		Minor		Moderate		Major		Replace		$0	
	Closed Circuit Surveillance	100%	x	None		Minor		Moderate		Major		Replace		$0	
	Access Control System	100%	x	None		Minor		Moderate		Major		Replace		$0	
	Intrusion Alarm System	100%	x	None		Minor		Moderate		Major		Replace		$0	
	Fire Alarm / Detection	100%	x	None		Minor		Moderate		Major		Replace		$0	
	Lighting Control System	100%	x	None		Minor		Moderate		Major		Replace		$0	
D5090 Other Electrical Systems	NOT USED			None		Minor		Moderate		Major		Replace			
E EQUIPMENT & FURNISHINGS															
E10 Equipment															
E1010 Commercial Equipment	Food Service		o	None		Minor		Moderate		Major		Replace		$0	
	Vocational		o	None		Minor		Moderate		Major		Replace		$0	
E1020 Institutional Equipment	Science		o	None		Minor		Moderate		Major		Replace		$0	
	Art		o	None		Minor		Moderate		Major		Replace		$0	
	Stage Performance		o	None		Minor		Moderate		Major		Replace		$0	Cost/SF of Stage Performance Area
	Restroom Accessories/Stalls	5%	x	None		Minor		Moderate		Major		Replace		$0	
E1030 Vehicular Equipment	NOT USED			None		Minor		Moderate		Major		Replace			
E1090 Other Equipment	NOT USED			None		Minor		Moderate		Major		Replace			
E20 Furnishings															
E2010 Fixed Furnishings		1%		None		Minor		Moderate		Major	x	Replace	100%	$154	Kitchenette should be replaced in its entirety
E2020 Movable Furnishings		45%		None		Minor		Moderate		Major	x	Replace	50%	$8,939	
F SPECIAL CONSTRUCTION & DEMOLITION - NOT USED															
G BUILDING SITE WORK															
G10 Site Preparation	NOT USED														
G20 Site Improvements															
G2010 Roadways			o	None		Minor		Moderate		Major		Replace		$0	Cost/SF of surface area
G2020 Parking Lots		700	x	None		Minor		Moderate		Major		Replace		$0	Cost/SF of surface area
G2030 Pedestrian Paving			o	None		Minor		Moderate		Major		Replace		$0	Cost/SF of surface area

G2040 Site Development			o	None	Minor	Moderate	Major	Replace		$0	Cost/LF of fencing
G2050 Landscaping			o	None	Minor	Moderate	Major	Replace		$0	Cost/SF of irrigated area
G30 Site Mechanical Utilities											
G3010 Water Supply	Domestic	490	x	None	Minor	Moderate	Major	Replace		$0	Enter LF of pipe in cell E143
	Fire		o	None	Minor	Moderate	Major	Replace		$0	Enter LF of pipe in cell E144
G3020 Sanitary Sewer		490	x	None	Minor	Moderate	Major	Replace		$0	Enter LF of pipe in cell E145
G3030 Storm Sewer		490	x	None	Minor	Moderate	Major	Replace		$0	Enter SF of area to be drained
G3040 Heating Distribution			o	None	Minor	Moderate	Major	Replace		$0	Enter LF of pipe in cell E147
G3050 Cooling Distribution			o	None	Minor	Moderate	Major	Replace		$0	Enter LF of pipe in cell E148
G3060 Fuel Distribution		490	x	None	Minor	Moderate	Major	Replace		$0	Enter LF of pipe in cell E149
G3090 Other Site Mechanical Utilities	NOT USED			None	Minor	Moderate	Major	Replace			
G40 Site Electrical Utilities											
G4010 Electrical Distribution	Service	100%	x	None	Minor	Moderate	Major	Replace		$0	
	Generator		o	None	Minor	Moderate	Major	Replace		$0	
G4020 Site Lighting		100%	x	None	Minor	Moderate	Major	Replace		$0	
G4030 Site Communications & Security		100%	x	None	Minor	Moderate	Major	Replace		$0	
G4090 Other Site Electrical Utilities	NOT USED			None	Minor	Moderate	Major	Replace			
G90 Other Site Construction	NOT USED										

OTHER

Description of System	Unit of Measure	Quantity	Unit Budget	Extended	Notes
				$0	
				$0	
				$0	
				$0	
				$0	
				$0	
				$0	
				$0	
				$0	

Physical Condition Budget Sub-Total	**$15,993**
Budgeted Development Costs	**$6,077**
Physical Condition Budget TOTAL	**$22,070**
Cost with Escalation to June 2021	**$25,160**
Cost with Escalation to June 2022	**$26,166**
Cost with Escalation to June 2023	**$27,213**
Replacement Budget	**$856,607**

IBI GROUP

GERVAIS SCHOOLS est. 1834

ASSESSMENT QUESTIONNAIRES

ADA ASSESSMENT

HARMFUL SUBSTANCES ASSESSMENT

INDOOR AIR QUALITY ASSESSMENT

IT ASSESSMENT

SCHOOL SAFETY AUDIT

ADA ASSESSMENT ACCURATE FOR ALL BUILDING SITES

	YES	NO	N/A	COMMENTS
There is at least 1 route from site arrival points that does not require the use of stairs.	X			
If parking is provided for the public, there are adequate number of accessible spaces provide (1 per 25).	X			
There is at least 1 van accessible parking space among the accessible spaces.	X			
The slope of the accessible parking spaces and access aisles is no steeper than 1:48 in all directions.	X			
The access aisles adjoin an accessible route.	X			
Accessible spaces are identified with a sign that includes the International Symbol of Accessibility.		X		
There are signs reading "van accessible" at van accessible spaces.	X			
If the accessible route crosses a curb, there is a curb ramp.	X			
Ramps are sloped no greater than 1:12.	X			
The main entrance is accessible.	X			
If the main entrance is not accessible, there is an alternative accessible entrance.	X			
The alternative accessible entrance can be used independently and during the same hours as the main entrance.	X			
All inaccessible entrances have signs with the International Symbol of Accessibility indicating the location of the nearest accessible entrance.	X			
The door is equipped with hardware, including locks, that is operable with one hand and does not require tight grasping, pinching, or twisting of the wrist.	X			
The operable parts of the door hardware are no less than 34" and no greater than 48" above the floor or ground surface.	X			
In locker rooms, there is at least one room with a bench.	X			
At least one toilet room is accessible (either one for each sex or one unisex).	X			
There are signs with the International Symbol of Accessibility at inaccessible toilet rooms that give directions to accessible toilet rooms.	X			
There is a route to the accessible toilet room(s) that does not include stairs.	X			
The door is equipped with hardware that is operable with one hand and does not require tight grasping, pinching, or twisting of the wrist.	X			
The operable parts of the door hardware are no less than 34" and no greater than 48" above the floor or ground surface.	X			
The door can be opened easily (5 lbs. maximum force).	X			
Lighting controls are operable with one hand and without tight grasping, pinching, or twisting of the wrist.	X			
Mounted switches are no less than 34" and no greater than 48" above the floor or ground surface.	X			

HARMFUL SUBSTANCES ASSESSMENT				ACCURATE FOR ALL BUILDING SITES
	YES	NO	N/A	COMMENTS
Lead				
Has your facility been assessed for lead? If so when?		X		all buildings
Is there lead in your facility?	X			all buildings, very little
Is lead abatement included in your future bond plans?	?	?		all buildings
Asbestos				
Has your facility been assessed for asbestos? If so when?	X			all buildings, 1988
Is there asbestos in your facility?	X			most removed, all buildings
Is asbestos abatement included in your future bond plans?			X	all buildings
Mold				
Has your facility been assessed for mold? If so when?		X		all buildings
Is there mold in your facility?		X		all buildings
Is mold abatement included in your future bond plans?		?		all buildings
Water Quality				
Has your facility been assessed for water quality (lead, etc)? If so when?	X			all buildings
Is there a water quality concern in your facility?		X		all buildings
Is water treatment included in your future bond plans?		X		all buildings
PCBs				
Has your facility been assessed for PCBs? If so when?	X			all buildings - replaced all lights in the buildings
Are there PCBs in your facility?		X		being done, all buildings
Is PCB abatement included in your future bond plans?			X	now, all buildings
Radon				
Has your facility been assessed for Radon? If so when?	X			no radon, all buildings
Is there Radon in your facility?		X		all buildings
Is Radon management included in your future bond plans?			X	all buildings

INDOOR AIR QUALITY ASSESSMENT ACCURATE FOR ALL BUILDING SITES EXCEPT MAIN HIGH SCHOOL				
	YES	**NO**	**N/A**	**COMMENTS**
Is someone designated to develop and implement an indoor air quality management plan for your school district?		X		
Does your district have an indoor air quality management plan that includes steps for preventing and resolving indoor air quality problems?		X		
Are school buildings inspected once or twice each year for conditions that may lead to indoor air quality problems?	X			
Is a preventive maintenance schedule established and in operation for the heating, ventilation, and air conditioning (HVAC) system? Is the schedule in accordance with the manufacturer's recommendations or accepted practice for the HVAC system?				No HVAC
Does the HVAC preventive maintenance schedule include the following?: checking and/or changing air filters and belts, lubricating equipment parts, checking the motors, and confirming that all equipment is in operating order.	X			
Is the maintenance schedule updated to show all maintenance performed on the building systems?		X		On the buildings that have HVAC
Does the maintenance schedule include the dates that the building systems maintenance was performed and the names of the persons or companies performing the work?	X			
Are maintenance schedules retained for at least three years?				
Are damaged or inoperable components of the HVAC system replaced or repaired as appropriate?	X			
Are reservoirs or parts of the HVAC system with standing water checked visually for microbial growth?	X			
Are water leaks that could promote growth of biologic agents promptly repaired?	X			
Are damp or wet materials that could promote growth of biologic agents promptly dried, replaced, removed, or cleaned?	X			
Are microbial contaminants removed from ductwork, humidifiers, other HVAC and building system components, and from building surfaces such as carpeting and ceiling tiles when found during regular or emergency maintenance activities or visual inspection?	X			
Is general or local exhaust ventilation used where housekeeping and maintenance activities could reasonably be expected to result in exposure to hazardous substances above applicable exposure limits?	X			
Does the HVAC system have CO2 monitoring capability (demand control ventilation)?	X			
Are humidity levels maintained between 30% to 60% relative humidity?			X	
When a contaminant is identified in the make-up air supply, is the source of the contaminant eliminated, or are the make-up inlets or exhaust air outlets relocated to avoid entry of the contaminant into the air system?				Steam heat in main building
If buildings do not have mechanical ventilation, are windows, doors, vents, stacks, and other portals used for natural ventilation operating properly?	X			

INDOOR AIR QUALITY ASSESSMENT				ACCURATE FOR MAIN HIGH SCHOOL
	YES	**NO**	**N/A**	**COMMENTS**
Is someone designated to develop and implement an indoor air quality management plan for your school district?		X		
Does your district have an indoor air quality management plan that includes steps for preventing and resolving indoor air quality problems?		X		
Are school buildings inspected once or twice each year for conditions that may lead to indoor air quality problems?	X			
Is a preventive maintenance schedule established and in operation for the heating, ventilation, and air conditioning (HVAC) system? Is the schedule in accordance with the manufacturer's recommendations or accepted practice for the HVAC system?	X			There will be when current project is completed
Does the HVAC preventive maintenance schedule include the following?: checking and/or changing air filters and belts, lubricating equipment parts, checking the motors, and confirming that all equipment is in operating order.	X			
Is the maintenance schedule updated to show all maintenance performed on the building systems?	X			It will be with new project
Does the maintenance schedule include the dates that the building systems maintenance was performed and the names of the persons or companies performing the work?	X			
Are maintenance schedules retained for at least three years?	X			
Are damaged or inoperable components of the HVAC system replaced or repaired as appropriate?	X			
Are reservoirs or parts of the HVAC system with standing water checked visually for microbial growth?	X			
Are water leaks that could promote growth of biologic agents promptly repaired?	X			
Are damp or wet materials that could promote growth of biologic agents promptly dried, replaced, removed, or cleaned?	X			
Are microbial contaminants removed from ductwork, humidifiers, other HVAC and building system components, and from building surfaces such as carpeting and ceiling tiles when found during regular or emergency maintenance activities or visual inspection?	X			
Is general or local exhaust ventilation used where housekeeping and maintenance activities could reasonably be expected to result in exposure to hazardous substances above applicable exposure limits?	X			
Does the HVAC system have CO2 monitoring capability (demand control ventilation)?	X			
Are humidity levels maintained between 30% to 60% relative humidity?			X	Will have
When a contaminant is identified in the make-up air supply, is the source of the contaminant eliminated, or are the make-up inlets or exhaust air outlets relocated to avoid entry of the contaminant into the air system?	X			
If buildings do not have mechanical ventilation, are windows, doors, vents, stacks, and other portals used for natural ventilation operating properly?	X			

INFORMATION TECHNOLOGY ASSESSMENT				ACCURATE FOR ALL BUILDING SITES
	YES	NO	N/A	COMMENTS
1. Connectivity "speed " to the Facility:				
a. 10 Gbps or greater				
b. 1 Gbps or greater	X			1Gbps x 1Gbps Direct Internet Access
c. 100 Mbps or less				
d. 10 Mbps or less				
e. Less than 10 Mbps				
2. Local area network connectivity "speed " at the individual building level:				
a. 10 Gbps or greater				
b. 1 Gbps or greater	X			fiber backbone between bldgs
c. 100 Mbps or less				
d. 10 Mbps or less				
e. Less than 10 Mbps				
3. Wireless Coverage:				
a. Facility Wide	X			
b. Secure?	X			
c. Type:				
i. AC				
ii. N	X			
iii. A/B/G				
4. Building cabling:				
a. Fiber (to the desktop)				
b. CAT 6	X			
c. CAT 5 E	X			
d. CAT 5	X			
5. Security:				
a. Access control	X			
b. Video Surveillance	X			
c. Central Communications Systems	X			

SCHOOL SAFETY AUDIT ASSESSMENT				ACCURATE FOR ALL BUILDING SITES
	YES	NO	N/A	COMMENTS
School grounds are fenced.	X			
There is one clearly marked and designated entrance for visitors	X			
Signs are posted for visitors to report to main office through a designated entrance.	X			
Restricted areas are clearly marked	X			
Shrubs and foliage are trimmed to allow for good line of sight. (3'-0"/8'- 0" rule)	X			
Shrubs near building have been trimmed "up" to allow view of bottom of building	X			
Bus loading and drop-off zones are clearly defined.	X			
There is a schedule for maintenance of:	X			
a. Outside lights	X			
b. Locks/Hardware	X			
c. Storage Sheds	X			
d. Windows	X			
e. Other exterior buildings	X			
Parent drop-off and pick-up area is clearly defined.	X			
There is adequate lighting around the building.	X			
Lighting is provided at entrances and other points of possible intrusion.	X			
The school ground is free from trash or debris.	X			
The school is free of graffiti.	X			
Play areas are fenced.	X			
Playground equipment has tamper-proof fasteners	X			
Visual surveillance of bicycle racks from main office is possible.				yes by camera
Visual surveillance of parking lots from main office is possible				yes by camera
Parking lot is lighted properly and all lights are functioning	X			
Accessible lenses are protected by some unbreakable material				
Staff and visitor parking has been designated	X			
Outside hardware has been removed from all doors except at points of entry.		X		
Ground floor windows:				
a. have no broken panes;	X			
b. locking hardware is in working order.	X			
Basement windows are protected with grill or well cover.				no basement
Doors are locked when classrooms are vacant.	X			
High-risk areas are protected by high security locks and an alarm system	X			
a. Main office	X			
b. Cafeteria	X			
c. Computer Labs				
d. Industrial Arts rooms	X			no computer lab
e. Science labs	X			
f. Nurses Office	X			
g. Boiler Room	X			
h. Electrical Rooms	X			
i. Phone line access closet	X			
Unused areas of the school can be closed off during after school activities.	X			
There is two-way communication between the main office and:	X			
a. Classroom	X			
b. Duty stations	X			
c. Re-locatable classrooms	X			
d. Staff and faculty outside building	X			
e. Buses	X			
There is a central alarm system in the school. If yes, briefly describe:	X			
The main entrance is visible from the main office.	X			

A.4

SEISMIC EVALUATION REPORT

GERVAIS ELEMENTARY SCHOOL

150 Douglas Ave NE
Gervais, OR 97026

SEISMIC EVALUATION REPORT

Prepared By:
tk1sc
616 1st Avenue, Suite 500
Seattle, WA 98104

Report Date: March 27, 2020
Project Number: 2020-0057

Prepared For:
Gervais School District
290 1st Street
Gervais, OR 97026

Table of Contents

INTRODUCTION 2

APPLICABLE CODES AND STANDARDS 2

SITE OBSERVATIONS 2

BUILDING DESCRIPTION 2

GRAVITY LOAD RESISTING SYSTEMS 3

LATERAL FORCE RESISTING SYSTEM 3

EXISTING FOUNDATION SYSTEM 4

PREVIOUS RETROFIT WORK 5

SEISMIC EVALUATION PERFORMANCE OBJECTIVES 5

BUILDING INFORMATION AND EVALUATION CRITERIA 6

SEISMIC EVALULATION METHODOLOGY 6

ITEMS THAT MAY REQUIRE FUTHER INVESTIGATION 6

- Basic Checklist 7
- Collapse Prevention Structural Checklist for Building Types W2: Wood Frames, Commercial and Industrial 7
- Collapse Prevention Structural Checklist for Building Types PC1: Tilt-Up Concrete Shear Walls with Flexible Diaphragms 8
- Collapse Prevention Structural Checklist for Building Types RM1: Reinforced Masonry Bearing Walls with Flexible Diaphragms 8
- Nonstructural Checklist 9

RECOMMENDATIONS 9

APPENDIX A: SCHEMATIC UPGRADE SKETCHES 11

APPENDIX B: GLOSSARY OF TERMS 16

APPENDIX C: SITE PLAN 18

APPENDIX D: TIER 1 SCREENING CHECKLISTS 19

APPENDIX E: QUICK CHECK HAND CALCULATIONS 35

APPENDIX F: COST ESTIMATES 42

INTRODUCTION

tk1sc has performed a seismic assessment of Gervais Elementary School in Gervais, Oregon, based on the Tier 1 screening procedure per ASCE 41-17. The building being evaluated is located at 150 Douglas Ave NE, Gervais, OR 97026.

Using the ASCE 41-17 standard, structural components were evaluated to the "Limited Safety" performance level and non-structural components were evaluated to the "Hazards Reduced" performance level to identify potential deficiencies and provide recommendations for further investigation as well as possible upgrade solutions to mitigate these deficiencies.

APPLICABLE CODES AND STANDARDS

Below is a list of governing building codes (original and current), as well as the applicable seismic evaluation and retrofit standard:

CODES AND STANDARDS	
Original Governing Building Code:	Original structure – unknown 1970 Addition – unknown 1990 Addition – unknown 2013 Modular Building – 2010 OSSC
Current Governing Building Code:	2014 Oregon Structural Specialty Code
Seismic Eval/Retrofit Referenced Standard:	American Society of Civil Engineers, "Seismic Evaluation and Retrofit of Existing Buildings" (ASCE 41-17)

SITE OBSERVATIONS

A site observation was performed by Jason Tornquist, PE, SE, and Ryan Kellberg, PE on January 29th, 2020, in order to assess the overall condition of the facility, as well as to verify general conformance of the existing conditions with the available structural drawings. The drawings to be used for the seismic assessment of the facility consist of:

- Original Building: Alterations & Additions Plan for School Building Drawings, prepared by Thompson & Thompson Architects and dated 9/4/1969
- 1970 Addition: Two Classroom Addition Gervais Grade School, prepared by Frank H. Kendall, and dated 4/30/1970
- 1990 Addition: Architectural record drawings, dated September 1990
- 2013 Modular Building: None available

No demolition or invasive investigation was performed as part of this site visit, and as such, the investigation was limited to exposed structural elements visible from reasonably accessible spaces, as well as spaces above lay-in ceiling tile.

BUILDING DESCRIPTION

The facility located 150 Douglas Ave NE, Gervais, OR 97026 is comprised of four buildings. What is shown as "the original building" in Figure 1 below is actually a multi-phase wood building that was constructed in several phases, with the first phase constructed around 1909. Based on the very limited available information and our site evaluation, it is clear that this assembly of buildings was built in multiple phases, but exact ages and extents are construction are unknown. Additionally, no seismic

joints were observed throughout the facility; all phases of construction appeared to be constructed in a continuous manner. In 1970, a freestanding two-classroom building was added, measuring approximately 33 ft x 80 ft and located to the southwest of the main building. In 1990, a large one-story building was added with a gym and cafeteria, measuring approximately 100 ft x 220 ft, and located to the west of the main building. The final addition to the facility was a modular classroom building measuring approximately 70 ft x 200 ft, located to the north of the main building and added in 2013.

Figure 1 - Site Orientation Plan

Per ASCE 41-17, section 3.3, the 2013 modular classroom addition, is considered a "benchmark building". Due to the age and original design codes for this portion of the facility, it has been deemed to comply with the provisions of the ASCE 41-17 standard for the purposes of this assessment. Any descriptions of the system in this structure is provided for reference only; a complete seismic assessment of this area was not performed.

GRAVITY LOAD RESISTING SYSTEMS

The gravity load resisting system of each portion of the primary structure consists of the following elements:

- Original Building: Wood roof sheathing over wood joists and wood trusses, supported by wood beams, wood posts, and wood framed bearing walls. Building is supported by what appeared to be shallow concrete foundations.
- 1970 Addition: Plywood sheathed roof, dimension lumber rafters, gyp sheathed wood bearing walls. Building is supported by what appeared to be shallow concrete foundations.
- 1990 Addition: Plywood roof sheathing, open web wood trusses, and a combination of concrete tilt up walls, CMU bearing walls and wood stud walls. Building is supported by what appeared to be shallow concrete foundations.

LATERAL FORCE RESISTING SYSTEM

- Original Building: wood roof diaphragms, supported by wood rafters and trusses. Primarily straight sheathed roof diaphragm. In some areas, it appeared that a plywood overlay may have been added, but the full extents, type, and nailing of the plywood overlay is unknown. The diaphragm transfers load to straight sheathed and diagonally sheathed wood shear walls.

- 1970 Addition: plywood sheathed roof diaphragm over wood roof trusses, unblocked plywood sheathed shear walls (sheathing extends to roof at exterior, but not at interior).
- 1990 Addition: blocked plywood diaphragms over open-web wood trusses transfer forces to a combination of CMU shear walls, gyp sheathed wood shear walls and concrete tilt-up shear walls.

The lateral force resisting system of the original portion of the building and the 1970 addition can be classified per ASCE 41-17 as a W2 system, which is defined as follows:

> *"These buildings are commercial or industrial buildings with a floor area of 5,000 ft^2 or more. There are few, if any, interior walls. The floor and roof framing consists of wood or steel trusses, glulam or steel beams, and wood posts or steel columns. The foundation system is permitted to consist of a variety of elements. Seismic forces are resisted by flexible diaphragms and exterior walls sheathed with plywood, oriented strand board, stucco, plaster, or straight or diagonal wood sheathing, or they are permitted to be braced with various forms of bracing. Wall openings for storefronts and garages, where present, are framed by post-and-beam framing."*

The 1990 addition has a combination of several lateral force resisting systems. Part of the building can be classified per ASCE 41-17 as W2 (defined above). Another portion of the building can be classified as RM1, which is defined as follows:

> *"These buildings have bearing walls that consist of reinforced brick or concrete block masonry. The floor and roof framing consists of steel or wood beams and girders, cold-formed steel light-frame construction, or open web joists and are supported by steel, wood, or masonry columns. Seismic forces are resisted by the reinforced brick or concrete block masonry shear walls. Diaphragms consist of straight or diagonal wood sheathing, plywood, or untopped metal deck and are flexible relative to the walls. The foundation system is permitted to consist of a variety of elements."*

The gym portion of this building has a lateral force resisting system that can be classified as PC1, which is defined as follows:

> *"These buildings have precast concrete perimeter wall panels and often, interior walls, that are typically cast on site and tilted into place. The panels are interconnected by weldments, cast-in-place concrete pilasters, or collector elements. Floor and roof framing consists of wood joists, glulam beams, steel beams, or open web joists. Framing is supported on interior steel or wood columns and perimeter concrete bearing walls. The floors and roof consist of wood sheathing or untopped metal deck. Seismic forces are resisted by the precast concrete perimeter wall panels. Wall panels are permitted to be solid or have large window and door openings that cause the panels to behave more as frames than as shear walls. In older construction, wood framing is attached to the walls with wood ledgers. The roof framing is permitted to have tension-capable connections between elements. The foundation system is permitted to consist of a variety of elements."*

EXISTING FOUNDATION SYSTEM

The original portion of the building has various foundation elements:

- There is a crawlspace under a portion of the building where wood posts and beams are supported by shallow foundations.
- There are also portions of the facility that have a concrete slab on grade.
- Walls appear to be supported by concrete stem walls on continuous shallow foundations.

The 1970 addition has a 3.5" concrete slab on grade, and all walls are supported by concrete stem walls and continuous shallow wall foundations.

The 1990 addition appears to have a concrete slab on grade.

For all portions of the facility, the exact construction of the footings cannot be fully verified without existing drawings or excavation work, as they are not visible, but most likely consist of continuous shallow wall foundations.

PREVIOUS RETROFIT WORK

There is no record of previous retrofit work on any of the buildings at this facility. Additionally, there was no evidence observed during the site visit to suggest that retrofit work has previously been performed.

SEISMIC EVALUATION PERFORMANCE OBJECTIVES

The seismic evaluation of the Gervais Elementary School facility was performed using *ASCE 41-17: Seismic Evaluation and Retrofit of Existing Buildings*. This standard defines various ground acceleration levels to be used in the investigation, depending on whether the evaluation/retrofit process is to be carried out to the equivalent standard of a new building (BSE-1N and BSE-2N), or to a reduced level (BSE-1E and BSE-2E). The reduced level of performance is based on the assumption that an existing building will have a shorter life span than that of a new building.

The Oregon Department of Education requires that the schools be evaluated as Risk Category III structures with the ability to perform to the Limited Safety Structural Performance Level (S-4) at the BSE-2E hazard level. This hazard level has a probability of exceedance of 5% over 50 years, or a 975-year return period. The basic performance objective for existing buildings for Limited Safety requires the use of the Collapse Prevention check lists, while the acceptance criteria for Tier 1 calculation-based quick checks be the average of Life Safety and Collapse Prevention.

The Oregon Department of Education Rule that outlines the requirements for the School Construction Matching Program does not explicitly provide requirements for the performance objectives to be used for non-structural performance. For this assessment, non-structural performance was reviewed against the "Hazards Reduced" (N-D) performance level, as this is consistent with the 41-17 requirements for Risk Category III buildings and the BSE-2E basic performance objective. See the glossary of terms for a full description of these performance levels.

BUILDING INFORMATION AND EVALUATION CRITERIA

The following is a summary of parameters used for the seismic evaluation of the building per ASCE 41-17:

BUILDING INFORMATION	
Site Latitude and Longitude:	45.104608, -122.896144
Year Built:	1909, 1970, 1990
Number of Stories:	1
Structural Performance Level:	Limited Safety (S-4)
Nonstructural Performance Level:	Hazards Reduced (N-D)
Design Spectral Response Acceleration Parameters:	S_{XS} = 0.778g (BSE-2E, 975-year return period) S_{X1} = 0.570g (BSE-2E, 975-year return period) S_a = 0.778g
Level of Seismicity:	High
Structure Type:	W2, RM1, and PC1
Benchmark Building:	Yes (2013 modular building)

SEISMIC EVALULATION METHODOLOGY

An ASCE 41-17 Tier 1 assessment was performed to identify potential deficiencies of the existing structure and non-structural systems. The Tier 1 procedure utilizes a checklist of items to be evaluated and various quick check calculation methods to verify the adequacy of the lateral force resisting system's load path and to identify potential seismic vulnerabilities within the structure. Checklists include a basic checklist for the overall building, a checklist for each of the primary lateral force resisting systems, and a checklist for nonstructural components and systems. Each item is marked as "Compliant", Noncompliant", "Not Applicable", or "Unknown" based on the information available. For all items marked as either "Noncompliant" or "Unknown", further investigation may be required to either verify compliance or identify the need for retrofit measures.

ITEMS THAT MAY REQUIRE FUTHER INVESTIGATION

The lists below are a summary of checklist items that were marked as either "non-compliant" or "unknown". See Appendix C for full checklist results. Please note that not all items marked as NC or U below will require remediation. See the "Recommendations" section of this report for further information.

Key: NC = Noncompliant, U = Unknown

Basic Checklist

DESCRIPTION	STATUS	COMMENT
LIQUEFACTION	U	No geotechnical investigation was performed as part of this study, therefore the existence of soils susceptible to liquefaction within 50 ft of the foundation cannot be verified.
SURFACE FAULT RUPTURE	U	No geotechnical investigation was performed as part of this study, therefore surface fault rupture and surface displacement is unknown.
TIES BETWEEN FOUNDATION ELEMENTS	U	Without as-built structural drawings, foundation ties cannot be verified unless more invasive investigation techniques are used.

Collapse Prevention Structural Checklist for Building Types W2: Wood Frames, Commercial and Industrial

DESCRIPTION	STATUS	COMMENT
SHEAR STRESS CHECK:	NC	Original Building: Noncompliant. 1970 Addition: Compliant
WOOD POSTS:	NC	There appears to be no connection between post bases where the connection is visible in the crawlspace.
WOOD SILLS:	U	Unable to verify whether wood sills are bolted to the foundation.
GIRDER-COLUMN CONNECTION:	NC	Where girder-column interfaces are visible, no connection appears to be present.
WOOD SILL BOLTS:	U	Unable to verify whether wood sills are bolted to the foundation.
ROOF CHORD CONTINUITY:	U	Unable to verify continuity of roof chords.
STRAIGHT SHEATHING	NC	Straight sheathing exists where diaphragms have an aspect ratio of greater than 2:1
SPANS	NC	There are diaphragms with spans greater than 24’ with straight sheathing.
DIAGONALLY SHEATHED AND UNBLOCKED DIAPHRAGMS:	NC	Unblocked diaphragms exist with spans greater than 40’.

Collapse Prevention Structural Checklist for Building Types PC1: Tilt-Up Concrete Shear Walls with Flexible Diaphragms

DESCRIPTION	STATUS	COMMENT
REINFORCING STEEL:	U	Without structural as-built drawings or x-ray investigation, existing reinforcing steel cannot be verified. However, based on the age of construction, it is likely that reinforcing steel ratio meets or exceeds the minimum limits of 0.0012 and 0.0020 in the vertical and horizontal directions respectively.
WALL THICKNESS:	NC	6" thick walls have a height limit of 20'. Gym walls are taller than 20'.
WOOD LEDGERS:	U	Wood ledger connections exist, however, it is unclear whether the connection induces cross grain bending.
CROSS TIES IN FLEXIBLE DIAPHRAGMS:	U	Cross ties cannot be verified without existing structural drawings. In the transverse direction, wood roof trusses likely provide cross ties. In the longitudinal direction, cross ties may not be present.
MINIMUM NUMBER OR WALL ANCHORS PER PANEL:	U	Wall anchors cannot be verified without existing structural drawings.
PRECAST WALL PANELS:	U	Precast wall panel connections to foundation cannot be verified without existing structural drawings.
UPLIFT AT PILE CAPS:	U	Pile cap reinforcing cannot be verified without existing structural drawings, however, it is unlikely that pile caps exist at this facility.
GIRDERS:	U	Ties securing anchor bolts cannot be verified without existing structural drawings or x-ray investigation.

Collapse Prevention Structural Checklist for Building Types RM1: Reinforced Masonry Bearing Walls with Flexible Diaphragms

DESCRIPTION	STATUS	COMMENT
REINFORCING STEEL:	U	Without structural as-built drawings or x-ray investigation, existing reinforcing steel cannot be verified. However, based on the age of construction, it is likely that reinforcing steel ratio meets or exceeds the minimum limit of 0.002 and 0.0007 in either direction, with a max spacing of 48".
WALL ANCHORAGE:	U	Out of plane wall anchorage cannot be verified without existing structural drawings or x-ray investigation.
WOOD LEDGERS:	U	Wood ledger connections exist, however, it is unclear whether the connection induces cross grain bending.
FOUNDATION DOWELS:	U	Dowels to foundations cannot be verified without existing structural drawings or x-ray investigation.
CROSS TIES:	U	Cross ties cannot be verified without existing structural drawings.
STIFFNESS OF WALL ANCHORS	U	Anchors in masonry cannot be verified without existing structural drawings.

Nonstructural Checklist

HAZARDOUS MATERIALS		
DESCRIPTION	**STATUS**	**COMMENT**
HAZARDOUS MATERIAL EQUIPMENT:	U	Unknown whether equipment mounted on vibration isolators and containing hazardous materials are equipped with restraints or snubbers. (Refers to natural gas equipment / appliances and may not present an issue).
HAZARDOUS MATERIAL STORAGE:	U	Unknown whether breakable containers that hold hazardous materials are restrained. (Unlikely to present an issue).
HAZARDOUS MATERIAL DISTRIBUTION:	U	Unknown which pipes are conveying hazardous material to verify whether bracing is present. (Refers to natural gas piping and may not present a serious issue).
SHUTOFF VALVES:	U	Unknown which pipes are conveying hazardous material to verify whether shutoff valves are present. (Refers to natural gas piping and may not present a serious issue).
FLEXIBLE COUPLINGS:	NC	There do not appear to be flexible couplings at ductwork or piping.
URM CHIMNEYS	NC	Unreinforced masonry chimney extends more than 2 times the least horizontal dimension.
ANCHORAGE	U	Unable to verify chimney anchorage at roof level.

RECOMMENDATIONS

Based on the deficiencies identified above, tk1sc recommends addressing the items listed below. Items are listed in order of decreasing importance, with the most important items listed first.

- **Shear Stress in Shear Walls and Shear Wall Connections:**
  - The original building has a combination of gypsum sheathed wood shear walls and straight sheathed wood shear walls which are insufficient to resist seismic loads. Additionally, at these locations, connections should be added between the shear wall and roof diaphragm, and shear wall and foundation. See Figure 2 below for extents of work and Figure 3 and Figure 4 for connection improvement details recommended to mitigate this deficiency.
  - The 1970 addition to the building has a sufficient amount of shear wall with plywood sheathing, however, connections between shear walls and the roof diaphragm, as well as connections between shear walls and foundations do not appear to be sufficient. See Figure 2 below for extents of work and Figure 3 and Figure 4 for connection improvement details recommended to mitigate this deficiency.
- **Post Connections:** In the original building where post connections are visible (both top and bottom connections), there does not appear to be a positive connection present. In the crawlspace area, it is recommended to provide post-installed screw anchors at post base to foundation connections, and post cap plates to beams. See Figure 7 and Figure 8 below for connection details. Additionally, in the basement area, there appear to be steel columns which are lacking connections at both the base and top conditions. It is recommended to provide post

installed anchors through the steel base plate to concrete below, and lag screws through the top plate into the wood beam above. See Figure 5 and Figure 6 below for connection details.

- **Diaphragm Improvements:** The original building appears to have a roof diaphragm comprised primarily of gap or straight-sheathing, all of which are unblocked that exceed allowable spans and aspect ratios (some areas may have plywood overlay). In areas where roof diaphragms span greater than 40 ft between shear walls, a new plywood overlayment should be installed and blocking should be installed at panel edges to provide sufficient capacity. See Figure 2 for approximate extents of work. Note: to minimize cost of this effort, we recommend alignment of overlay projects with re-roofing projects if possible.
- **Wood Ledgers:** In the 1990 addition, wood ledger connections exist at concrete tilt-up walls. It is unclear whether this ledger connections are in cross-grain bending. If these connections are in cross grain-bending, hold down connections should be added to roof framing members with post-installed anchors to concrete walls to eliminate this deficiency. See Figure 9 for detail at this connection type.
- **URM Chimneys:** In the original building, there is an unreinforced masonry chimney that extends above the roof plane more than 3 times its width. The chimney should either be filled in with reinforced concrete or braced back to structure. See Figure 10 and Figure 11 for bracing and infill details respectively.
- **Liquefaction:** A geotechnical investigation should be conducted to verify whether there are soils susceptible to liquefaction within a depth of 50 ft of the building. Required remediation will depend on the results of this investigation.
- **Shut off Valves and Flexible Couplings:** Flexible couplings and shut off valves should be installed at all components containing hazardous materials where they are identified to be lacking throughout the structure.

APPENDIX A: SCHEMATIC UPGRADE SKETCHES

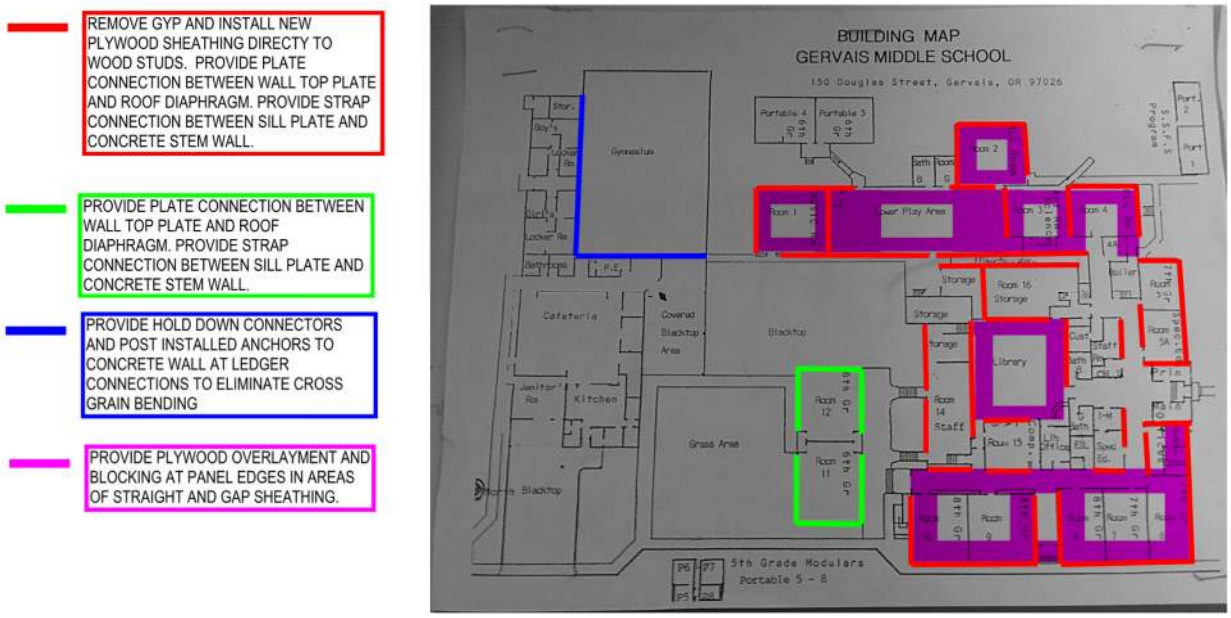

Figure 2-Shear Wall and Diaphragm Improvement Plan

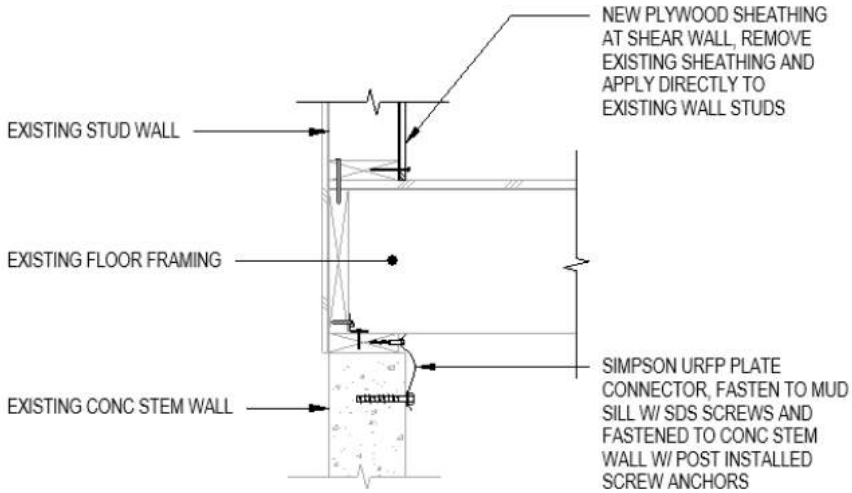

Figure 3-Shear Wall to Foundation

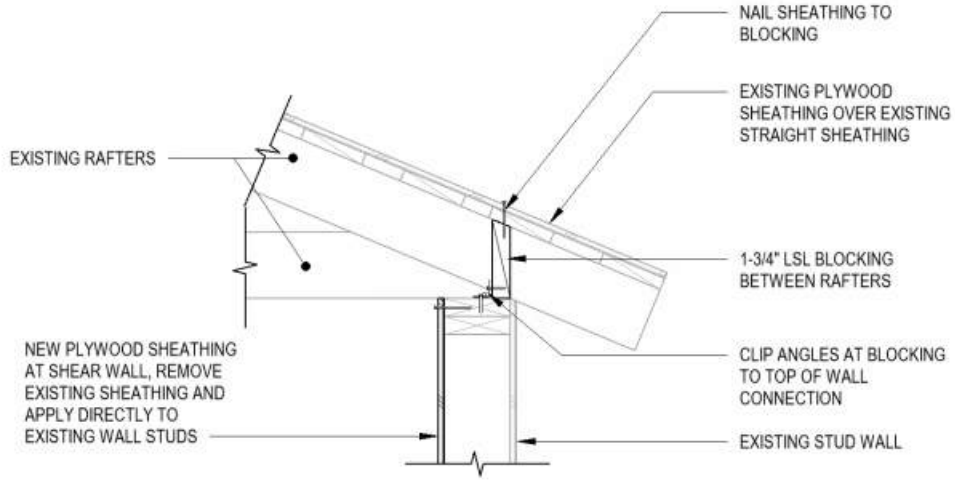

Figure 4-Shear Wall to Roof

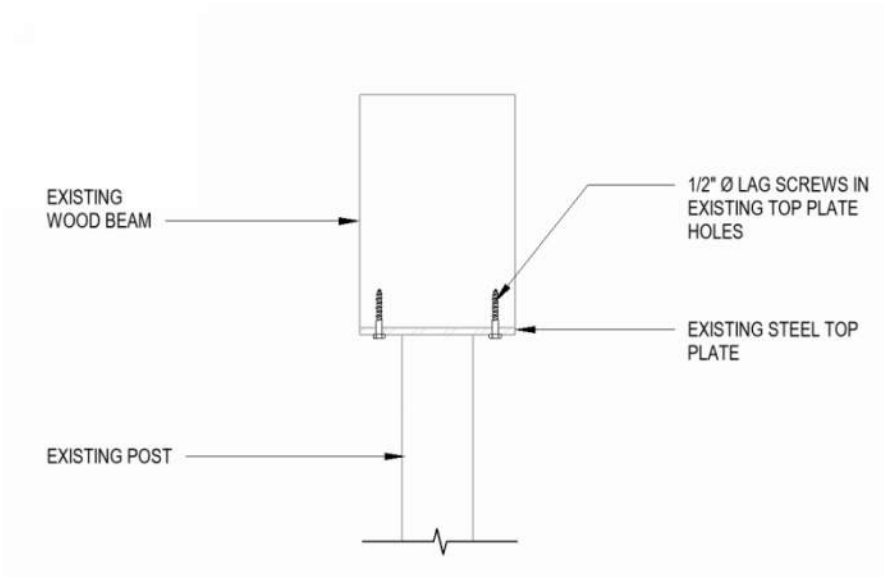

Figure 5-Steel Post to Beam Connection

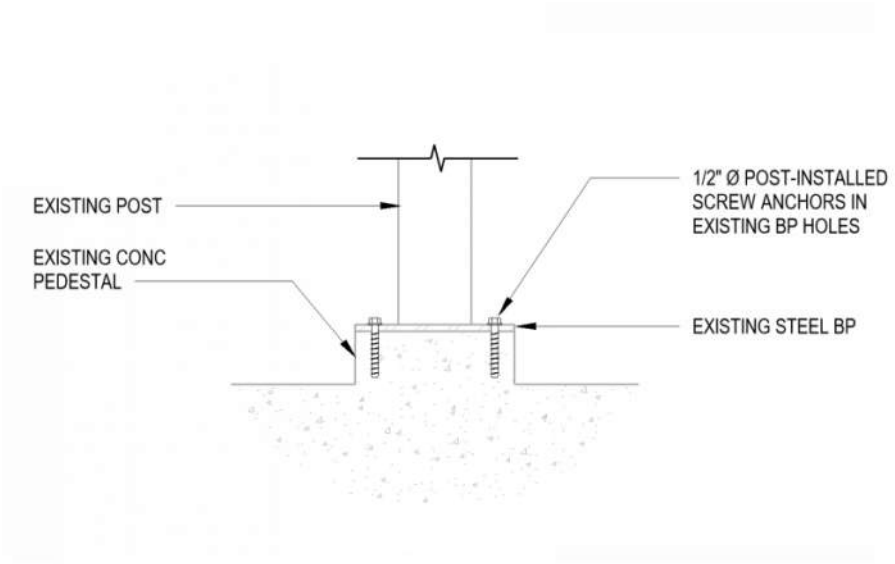

Figure 6-Steel Post to Foundation Connection

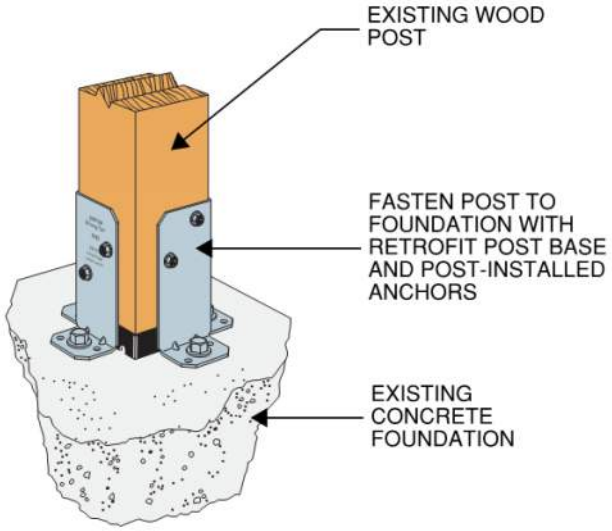

Figure 7-Wood Post to Foundation

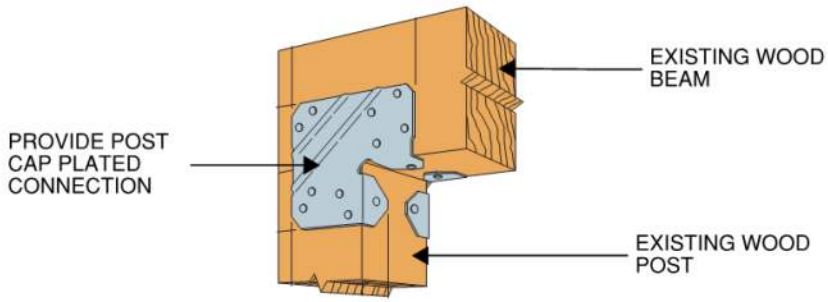

Figure 8-Wood Post Cap to Beam

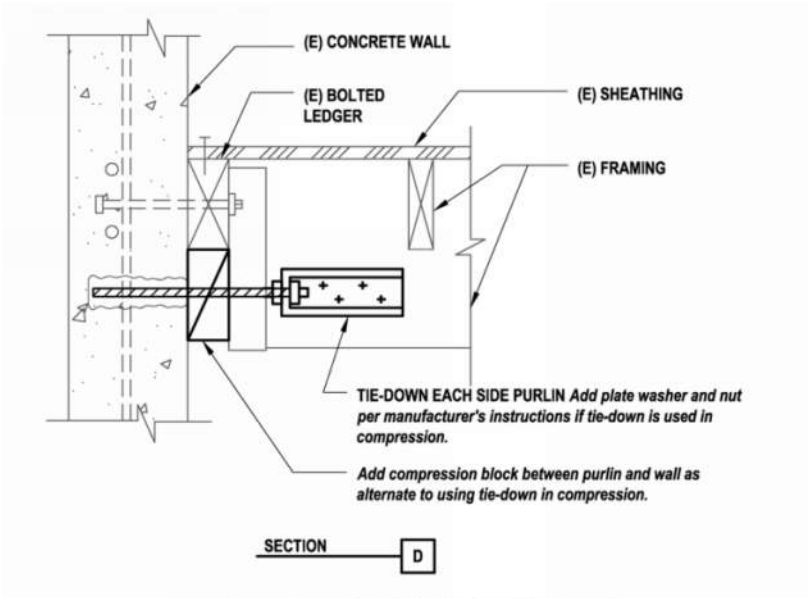

Figure 16.4.1-1D: Wall Out-of-Plane Anchorage

Figure 9-Ledger Connection at Concrete Wall

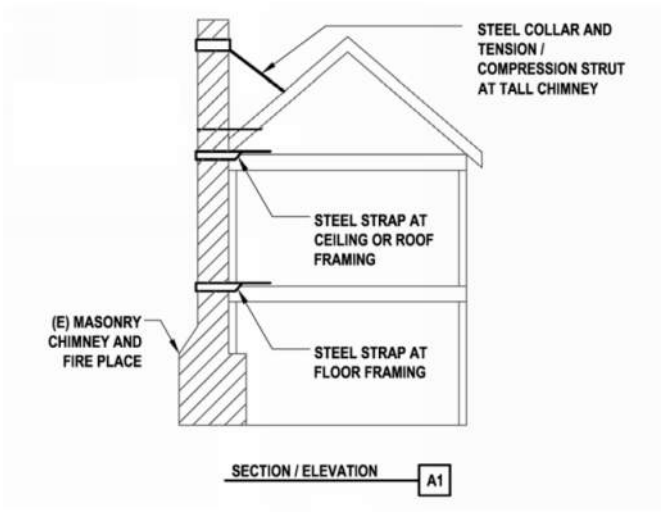

Figure 10-URM Bracing

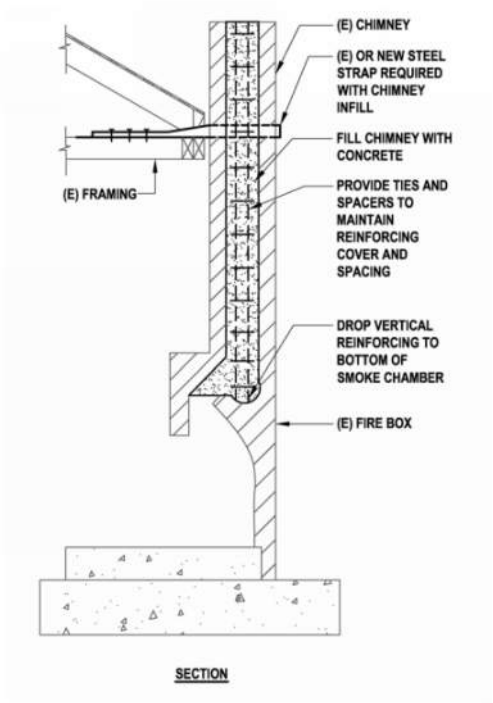

Figure 11-URM Infill

APPENDIX B: GLOSSARY OF TERMS

Tier 1 Screening - The purpose of the Tier 1 screening phase of the evaluation process is to quickly identify buildings that comply with the provisions of this standard. A Tier 1 screening also familiarizes the design professional with the building, its potential deficiencies, and its potential behavior. A Tier 1 screening is required for all buildings so that potential deficiencies may be quickly identified. Further evaluation using a Tier 2 or Tier 3 evaluation then focuses, at a minimum, on the potential deficiencies identified in Tier 1.

Tier 2 Deficiency-Based Evaluation - The Tier 2 deficiency-based evaluation requires additional analysis and evaluation of all the potential deficiencies identified in the Tier 1 screening (denoted by either "Noncompliant" or "Unknown" responses in the Tier 1 checklists). The additional analysis and evaluation of each potential deficiency shall be sufficient to either confirm the deficiency or demonstrate the adequacy of the structure as it relates to the potential deficiency. The scope of the Tier 2 deficiency-based evaluation need not expand beyond the evaluation of the potential deficiencies identified in the Tier 1 screening.

Tier 3 Systematic Procedure - The Tier 3 systematic procedure involves an analysis of the entire building, either in its current condition or with proposed retrofit measures. These procedures shall be used where systematic procedures are required in accordance with ASCE 41 and may be used as a further investigation of buildings where the deficiency-based evaluation procedures have been used.

Immediate Occupancy Structural Performance Level (S-1) - Immediate Occupancy, means the post-earthquake damage state in which only very limited structural damage has occurred. The basic vertical- and lateral-force resisting systems of the building retain almost all of their pre-earthquake strength and stiffness. The risk of life-threatening injury as a result of structural damage is very low, and although some minor structural repairs might be appropriate, these repairs would generally not be required before re-occupancy. Continued use of the building is not limited by its structural condition but might be limited by damage or disruption to nonstructural elements of the building, furnishings, or equipment and availability of external utility services.

Damage Control Structural Performance Level (S-2) - The Damage Control Structural Performance Level is set forth as a midway point between Life Safety and Immediate Occupancy. It is intended to provide a structure with a greater reliability of resisting collapse and being less damaged than a typical structure, but not to the extent required of a structure designed to meet the Immediate Occupancy Performance Level.

Life Safety Structural Performance Level (S-3) - Structural Performance Level S-3, Life Safety, means the post-earthquake damage state in which significant damage to the structure has occurred but some margin against either partial or total structural collapse remains. Some structural elements and components are severely damaged, but this damage has not resulted in large falling debris hazards, either inside or outside the building. Injuries might occur during the earthquake; however, the overall risk of life-threatening injury as a result of structural damage is expected to be low. It should be possible to repair the structure; however, for economic reasons, this repair might not be practical. Although the damaged structure is not an imminent collapse risk, it would be prudent to implement structural repairs or install temporary bracing before re-occupancy.

Limited Safety Structural Performance Level (S-4) - The Limited Safety Structural Performance Level is set forth as a midway point between Life Safety and Collapse Prevention. It is intended to provide a structure with a greater reliability of resisting collapse than a structure that only meets the Collapse Prevention Performance Level, but not to the full level of safety that the Life Safety Performance Level would imply.

Collapse Prevention Structural Performance Level (S-5) - Structural Performance Level S-5, Collapse Prevention, means the post-earthquake damage state in which the building is on the verge of partial or total collapse. Substantial damage to the structure has occurred, potentially including significant degradation in the stiffness and strength of the lateral-force-resisting system, large permanent lateral deformation of the structure, and—to a more limited extent—degradation in vertical-load-carrying capacity. However, all significant components of the gravity-load-resisting system must continue to carry their gravity loads. Significant risk of injury caused by falling hazards from structural debris might exist. The structure might not be technically practical to repair and is not safe for re-occupancy because aftershock activity could induce collapse.

Structural Performance Not Considered (S-6) - Where an evaluation or retrofit does not address the structure.

Operational Nonstructural Performance Level (N-A) - Nonstructural Performance Level N-A, Operational, is the post-earthquake damage state in which the nonstructural components are able to provide the functions they provided in the building before the earthquake.

Positional Retention Nonstructural Performance level (N-B) - Nonstructural Performance Level N-B, Position Retention, is the post-earthquake damage state in which nonstructural components might be damaged to the extent that they cannot immediately function but are secured in place so that damage caused by falling, toppling, or breaking of utility connections is avoided.

Life Safety Nonstructural Performance Level (N-C) - Nonstructural Performance Level N-C, Life Safety, is the post-earthquake damage state in which nonstructural components may be damaged, but the consequential damage does not pose a life-safety threat.

Hazards Reduced Nonstructural Performance Level (N-D) – Nonstructural Performance Level N-D, Hazards Reduced, shall be defined as the postearthquake damage state in which nonstructural components are damaged and could potentially create falling hazards, but high-hazard nonstructural components identified in Chapter 13, Table 13-1, are secured to prevent falling into areas of public assembly or those falling hazards from those components could pose a risk to life safety for many people.

Nonstructural Performance Not Considered (N-E) - Where an evaluation or retrofit does not address all nonstructural components to one of the levels in the previous sections.

APPENDIX C: SITE PLAN

APPENDIX D: TIER 1 SCREENING CHECKLISTS

Table 17-2. Collapse Prevention Basic Configuration Checklist

Status	Evaluation Statement	Tier 2 Reference	Commentary Reference
Low Seismicity			
Building System—General			
C NC N/A U	LOAD PATH: The structure contains a complete, well-defined load path, including structural elements and connections, that serves to transfer the inertial forces associated with the mass of all elements of the building to the foundation.	5.4.1.1	A.2.1.1
C NC N/A U	ADJACENT BUILDINGS: The clear distance between the building being evaluated and any adjacent building is greater than 0.25% of the height of the shorter building in low seismicity, 0.5% in moderate seismicity, and 1.5% in high seismicity.	5.4.1.2	A.2.1.2
C NC N/A U	MEZZANINES: Interior mezzanine levels are braced independently from the main structure or are anchored to the seismic-force-resisting elements of the main structure.	5.4.1.3	A.2.1.3
Building System—Building Configuration			
C NC N/A U	WEAK STORY: The sum of the shear strengths of the seismic-force-resisting system in any story in each direction is not less than 80% of the strength in the adjacent story above.	5.4.2.1	A.2.2.2
C NC N/A U	SOFT STORY: The stiffness of the seismic-force-resisting system in any story is not less than 70% of the seismic-force-resisting system stiffness in an adjacent story above or less than 80% of the average seismic-force-resisting system stiffness of the three stories above.	5.4.2.2	A.2.2.3
C NC N/A U	VERTICAL IRREGULARITIES: All vertical elements in the seismic-force-resisting system are continuous to the foundation.	5.4.2.3	A.2.2.4
C NC N/A U	GEOMETRY: There are no changes in the net horizontal dimension of the seismic-force-resisting system of more than 30% in a story relative to adjacent stories, excluding one-story penthouses and mezzanines.	5.4.2.4	A.2.2.5
C NC N/A U	MASS: There is no change in effective mass of more than 50% from one story to the next. Light roofs, penthouses, and mezzanines need not be considered.	5.4.2.5	A.2.2.6
C NC N/A U	TORSION: The estimated distance between the story center of mass and the story center of rigidity is less than 20% of the building width in either plan dimension.	5.4.2.6	A.2.2.7

continues

Table 17-2 *(Continued)*. Collapse Prevention Basic Configuration Checklist

Status	Evaluation Statement	Tier 2 Reference	Commentary Reference
Moderate Seismicity (Complete the Following Items in Addition to the Items for Low Seismicity)			
Geologic Site Hazards			
C NC N/A U	LIQUEFACTION: Liquefaction-susceptible, saturated, loose granular soils that could jeopardize the building's seismic performance do not exist in the foundation soils at depths within 50 ft (15.2 m) under the building.	5.4.3.1	A.6.1.1
C NC N/A U	SLOPE FAILURE: The building site is located away from potential earthquake-induced slope failures or rockfalls so that it is unaffected by such failures or is capable of accommodating any predicted movements without failure.	5.4.3.1	A.6.1.2
C NC N/A U	SURFACE FAULT RUPTURE: Surface fault rupture and surface displacement at the building site are not anticipated.	5.4.3.1	A.6.1.3
High Seismicity (Complete the Following Items in Addition to the Items for Moderate Seismicity)			
Foundation Configuration			
C NC N/A U	OVERTURNING: The ratio of the least horizontal dimension of the seismic-force-resisting system at the foundation level to the building height (base/height) is greater than $0.6S_a$.	5.4.3.3	A.6.2.1
C NC N/A U	TIES BETWEEN FOUNDATION ELEMENTS: The foundation has ties adequate to resist seismic forces where footings, piles, and piers are not restrained by beams, slabs, or soils classified as Site Class A, B, or C.	5.4.3.4	A.6.2.2

Note: C = Compliant, NC = Noncompliant, N/A = Not Applicable, and U = Unknown.

Table 17-6. Collapse Prevention Structural Checklist for Building Type W2

Status	Evaluation Statement	Tier 2 Reference	Commentary Reference
Low and Moderate Seismicity			
Seismic-Force-Resisting System			
C NC N/A U	REDUNDANCY: The number of lines of shear walls in each principal direction is greater than or equal to 2.	5.5.1.1	A.3.2.1.1
C NC N/A U	SHEAR STRESS CHECK: The shear stress in the shear walls, calculated using the Quick Check procedure of Section 4.4.3.3, is less than the following values: Structural panel sheathing 1,000 lb/ft Diagonal sheathing 700 lb/ft Straight sheathing 100 lb/ft All other conditions 100 lb/ft	5.5.3.1.1	A.3.2.7.1
C NC N/A U	STUCCO (EXTERIOR PLASTER) SHEAR WALLS: Multi-story buildings do not rely on exterior stucco walls as the primary seismic-force-resisting system.	5.5.3.6.1	A.3.2.7.2
C NC N/A U	GYPSUM WALLBOARD OR PLASTER SHEAR WALLS: Interior plaster or gypsum wallboard is not used for shear walls on buildings more than one story high with the exception of the uppermost level of a multi-story building.	5.5.3.6.1	A.3.2.7.3
C NC N/A U	NARROW WOOD SHEAR WALLS: Narrow wood shear walls with an aspect ratio greater than 2-to-1 are not used to resist seismic forces.	5.5.3.6.1	A.3.2.7.4
C NC N/A U	WALLS CONNECTED THROUGH FLOORS: Shear walls have an interconnection between stories to transfer overturning and shear forces through the floor.	5.5.3.6.2	A.3.2.7.5
C NC N/A U	HILLSIDE SITE: For structures that are taller on at least one side by more than one-half story because of a sloping site, all shear walls on the downhill slope have an aspect ratio less than 1-to-1.	5.5.3.6.3	A.3.2.7.6
C NC N/A U	CRIPPLE WALLS: Cripple walls below first-floor-level shear walls are braced to the foundation with wood structural panels.	5.5.3.6.4	A.3.2.7.7
C NC N/A U	OPENINGS: Walls with openings greater than 80% of the length are braced with wood structural panel shear walls with aspect ratios of not more than 1.5-to-1 or are supported by adjacent construction through positive ties capable of transferring the seismic forces.	5.5.3.6.5	A.3.2.7.8
Connections			
C NC N/A U	WOOD POSTS: There is a positive connection of wood posts to the foundation.	5.7.3.3	A.5.3.3
C NC N/A U	WOOD SILLS: All wood sills are bolted to the foundation.	5.7.3.3	A.5.3.4
C NC N/A U	GIRDER–COLUMN CONNECTION: There is a positive connection using plates, connection hardware, or straps between the girder and the column support.	5.7.4.1	A.5.4.1
High Seismicity (Complete the Following Items in Addition to the Items for Low and Moderate Seismicity)			
Connections			
C NC N/A U	WOOD SILL BOLTS: Sill bolts are spaced at 6 ft (1.8 m) or less with acceptable edge and end distance provided for wood and concrete.	5.7.3.3	A.5.3.7
Diaphragms			
C NC N/A U	DIAPHRAGM CONTINUITY: The diaphragms are not composed of split-level floors and do not have expansion joints.	5.6.1.1	A.4.1.1
C NC N/A U	ROOF CHORD CONTINUITY: All chord elements are continuous, regardless of changes in roof elevation.	5.6.1.1	A.4.1.3
C NC N/A U	DIAPHRAGM REINFORCEMENT AT OPENINGS: There is reinforcing around all diaphragm openings larger than 50% of the building width in either major plan dimension.	5.6.1.5	A.4.1.8
C NC N/A U	STRAIGHT SHEATHING: All straight-sheathed diaphragms have aspect ratios less than 2-to-1 in the direction being considered.	5.6.2	A.4.2.1
C NC N/A U	SPANS: All wood diaphragms with spans greater than 24 ft (7.3 m) consist of wood structural panels or diagonal sheathing.	5.6.2	A.4.2.2

continues

Table 17-6 *(Continued)*. Collapse Prevention Structural Checklist for Building Type W2

Status	Evaluation Statement	Tier 2 Reference	Commentary Reference
C NC N/A U	DIAGONALLY SHEATHED AND UNBLOCKED DIAPHRAGMS: All diagonally sheathed or unblocked wood structural panel diaphragms have horizontal spans less than 40 ft (12.2 m) and have aspect ratios less than or equal to 4-to-1.	5.6.2	A.4.2.3
C NC N/A U	OTHER DIAPHRAGMS: The diaphragms do not consist of a system other than wood, metal deck, concrete, or horizontal bracing.	5.6.5	A.4.7.1

Note: C = Compliant, NC = Noncompliant, N/A = Not Applicable, and U = Unknown.

Table 17-28. Collapse Prevention Structural Checklist for Building Types PC1 and PC1a

Status	Evaluation Statement	Tier 2 Reference	Commentary Reference
Low Seismicity Connections			
C NC N/A U	WALL ANCHORAGE: Exterior concrete or masonry walls that are dependent on the diaphragm for lateral support are anchored for out-of-plane forces at each diaphragm level with steel anchors, reinforcing dowels, or straps that are developed into the diaphragm. Connections have strength to resist the connection force calculated in the Quick Check procedure of Section 4.4.3.7.	5.7.1.1	A.5.1.1

continues

Table 17-28 *(Continued)*. Collapse Prevention Structural Checklist for Building Types PC1 and PC1a

Status	Evaluation Statement	Tier 2 Reference	Commentary Reference
Moderate Seismicity (Complete the Following Items in Addition to the Items for Low Seismicity)			
Seismic-Force-Resisting System			
C NC N/A U	REDUNDANCY: The number of lines of shear walls in each principal direction is greater than or equal to 2.	5.5.1.1	A.3.2.1.1
C NC N/A U	WALL SHEAR STRESS CHECK: The shear stress in the precast panels, calculated using the Quick Check procedure of Section 4.4.3.3, is less than the greater of 100 lb/in.^{2} (0.69 MPa) or $2\sqrt{f'_c}$.	5.5.3.1.1	A.3.2.3.1
C NC N/A U	REINFORCING STEEL: The ratio of reinforcing steel area to gross concrete area is not less than 0.0012 in the vertical direction and 0.0020 in the horizontal direction.	5.5.3.1.3	A.3.2.3.2
C NC N/A U	WALL THICKNESS: Thicknesses of bearing walls are not less than 1/40 the unsupported height or length, whichever is shorter, nor less than 4 in. (101 mm).	5.5.3.1.2	A.3.2.3.5
Diaphragms			
C NC N/A U	TOPPING SLAB: Precast concrete diaphragm elements are interconnected by a continuous reinforced concrete topping slab with a minimum thickness of 2 in. (51 mm).	5.6.4	A.4.5.1
Connections			
C NC N/A U	WOOD LEDGERS: The connection between the wall panels and the diaphragm does not induce cross-grain bending or tension in the wood ledgers.	5.7.1.3	A.5.1.2
C NC N/A U	TRANSFER TO SHEAR WALLS: Diaphragms are connected for transfer of seismic forces to the shear walls.	5.7.2	A.5.2.1
C NC N/A U	TOPPING SLAB TO WALLS OR FRAMES: Reinforced concrete topping slabs that interconnect the precast concrete diaphragm elements are doweled for transfer of forces into the shear wall or frame elements.	5.7.2	A.5.2.3
C NC N/A U	GIRDER–COLUMN CONNECTION: There is a positive connection using plates, connection hardware, or straps between the girder and the column support.	5.7.4.1	A.5.4.1
High Seismicity (Complete the Following Items in Addition to the Items for Low and Moderate Seismicity)			
Seismic-Force-Resisting System			
C NC N/A U	DEFLECTION COMPATIBILITY FOR RIGID DIAPHRAGMS: Secondary components have the shear capacity to develop the flexural strength of the components.	5.5.2.5.2	A.3.1.6.2
C NC N/A U	WALL OPENINGS: The total width of openings along any perimeter wall line constitutes less than 75% of the length of any perimeter wall when the wall piers have aspect ratios of less than 2-to-1.	5.5.3.3.1	A.3.2.3.3
Diaphragms			
C NC N/A U	CROSS TIES IN FLEXIBLE DIAPHRAGMS: There are continuous cross ties between diaphragm chords.	5.6.1.2	A.4.1.2
C NC N/A U	STRAIGHT SHEATHING: All straight-sheathed diaphragms have aspect ratios less than 2-to-1 in the direction being considered.	5.6.2	A.4.2.1
C NC N/A U	SPANS: All wood diaphragms with spans greater than 24 ft (7.3 m) consist of wood structural panels or diagonal sheathing.	5.6.2	A.4.2.2
C NC N/A U	DIAGONALLY SHEATHED AND UNBLOCKED DIAPHRAGMS: All diagonally sheathed or unblocked wood structural panel diaphragms have horizontal spans less than 40 ft (12.2 m) and aspect ratios less than or equal to 4-to-1.	5.6.2	A.4.2.3
C NC N/A U	OTHER DIAPHRAGMS: Diaphragms do not consist of a system other than wood, metal deck, concrete, or horizontal bracing.	5.6.5	A.4.7.1
Connections			
C NC N/A U	MINIMUM NUMBER OF WALL ANCHORS PER PANEL: There are at least two anchors connecting each precast wall panel to the diaphragm elements.	5.7.1.4	A.5.1.3
C NC N/A U	PRECAST WALL PANELS: Precast wall panels are connected to the foundation.	5.7.3.4	A.5.3.6
C NC N/A U	UPLIFT AT PILE CAPS: Pile caps have top reinforcement, and piles are anchored to the pile caps.	5.7.3.5	A.5.3.8

continues

Table 17-28 *(Continued)*. **Collapse Prevention Structural Checklist for Building Types PC1 and PC1a**

Status	Evaluation Statement	Tier 2 Reference	Commentary Reference
C NC N/A U	GIRDERS: Girders supported by walls or pilasters have at least two ties securing the anchor bolts unless provided with independent stiff wall anchors with strength to resist the connection force calculated in the Quick Check procedure of Section 4.4.3.7.	5.7.4.2	A.5.4.2

Note: C = Compliant, NC = Noncompliant, N/A = Not Applicable, and U = Unknown.

Table 17-34. Collapse Prevention Structural Checklist for Building Types RM1 and RM2

Status	Evaluation Statement	Tier 2 Reference	Commentary Reference
Low and Moderate Seismicity			
Seismic-Force-Resisting System			
C NC N/A U	REDUNDANCY: The number of lines of shear walls in each principal direction is greater than or equal to 2.	5.5.1.1	A.3.2.1.1
C NC N/A U	SHEAR STRESS CHECK: The shear stress in the reinforced masonry shear walls, calculated using the Quick Check procedure of Section 4.4.3.3, is less than 70 lb/in.^{2} (0.48 MPa).	5.5.3.1.1	A.3.2.4.1
C NC N/A U	REINFORCING STEEL: The total vertical and horizontal reinforcing steel ratio in reinforced masonry walls is greater than 0.002 of the wall with the minimum of 0.0007 in either of the two directions; the spacing of reinforcing steel is less than 48 in. (1220 mm), and all vertical bars extend to the top of the walls.	5.5.3.1.3	A.3.2.4.2
Stiff Diaphragms			
C NC N/A U	TOPPING SLAB: Precast concrete diaphragm elements are interconnected by a continuous reinforced concrete topping slab.	5.6.4	A.4.5.1
Connections			
C NC N/A U	WALL ANCHORAGE: Exterior concrete or masonry walls that are dependent on the diaphragm for lateral support are anchored for out-of-plane forces at each diaphragm level with steel anchors, reinforcing dowels, or straps that are developed into the diaphragm. Connections have strength to resist the connection force calculated in the Quick Check procedure of Section 4.4.3.7.	5.7.1.1	A.5.1.1
C NC N/A U	WOOD LEDGERS: The connection between the wall panels and the diaphragm does not induce cross-grain bending or tension in the wood ledgers.	5.7.1.3	A.5.1.2
C NC N/A U	TRANSFER TO SHEAR WALLS: Diaphragms are connected for transfer of seismic forces to the shear walls.	5.7.2	A.5.2.1
C NC N/A U	TOPPING SLAB TO WALLS OR FRAMES: Reinforced concrete topping slabs that interconnect the precast concrete diaphragm elements are doweled for transfer of forces into the shear wall or frame elements.	5.7.2	A.5.2.3
C NC N/A U	FOUNDATION DOWELS: Wall reinforcement is doweled into the foundation.	5.7.3.4	A.5.3.5
C NC N/A U	GIRDER–COLUMN CONNECTION: There is a positive connection using plates, connection hardware, or straps between the girder and the column support.	5.7.4.1	A.5.4.1
High Seismicity (Complete the Following Items in Addition to the Items for Low and Moderate Seismicity)			
Stiff Diaphragms			
C NC N/A U	OPENINGS AT SHEAR WALLS: Diaphragm openings immediately adjacent to the shear walls are less than 25% of the wall length.	5.6.1.3	A.4.1.4
C NC N/A U	OPENINGS AT EXTERIOR MASONRY SHEAR WALLS: Diaphragm openings immediately adjacent to exterior masonry shear walls are not greater than 8 ft (2.4 m) long.	5.6.1.3	A.4.1.6

continues

Table 17-34 *(Continued)*. **Collapse Prevention Structural Checklist for Building Types RM1 and RM2**

Status	Evaluation Statement	Tier 2 Reference	Commentary Reference
Flexible Diaphragms			
C NC N/A U	CROSS TIES: There are continuous cross ties between diaphragm chords.	5.6.1.2	A.4.1.2
C NC N/A U	OPENINGS AT SHEAR WALLS: Diaphragm openings immediately adjacent to the shear walls are less than 25% of the wall length.	5.6.1.3	A.4.1.4
C NC N/A U	OPENINGS AT EXTERIOR MASONRY SHEAR WALLS: Diaphragm openings immediately adjacent to exterior masonry shear walls are not greater than 8 ft (2.4 m) long.	5.6.1.3	A.4.1.6
C NC N/A U	STRAIGHT SHEATHING: All straight-sheathed diaphragms have aspect ratios less than 2-to-1 in the direction being considered.	5.6.2	A.4.2.1
C NC N/A U	SPANS: All wood diaphragms with spans greater than 24 ft (7.3 m) consist of wood structural panels or diagonal sheathing.	5.6.2	A.4.2.2
C NC N/A U	DIAGONALLY SHEATHED AND UNBLOCKED DIAPHRAGMS: All diagonally sheathed or unblocked wood structural panel diaphragms have horizontal spans less than 40 ft (12.2 m) and aspect ratios less than or equal to 4-to-1.	5.6.2	A.4.2.3
C NC N/A U	OTHER DIAPHRAGMS: Diaphragms do not consist of a system other than wood, metal deck, concrete, or horizontal bracing.	5.6.5	A.4.7.1
Connections			
C NC N/A U	STIFFNESS OF WALL ANCHORS: Anchors of concrete or masonry walls to wood structural elements are installed taut and are stiff enough to limit the relative movement between the wall and the diaphragm to no greater than 1/8 in. (3 mm) before engagement of the anchors.	5.7.1.2	A.5.1.4

Note: C = Compliant, NC = Noncompliant, N/A = Not Applicable, and U = Unknown.

Table 17-38. Nonstructural Checklist

Status	Evaluation Statement[a,b]	Tier 2 Reference	Commentary Reference
Life Safety Systems			
C NC N/A U	**HR—not required; LS—LMH; PR—LMH**. FIRE SUPPRESSION PIPING: Fire suppression piping is anchored and braced in accordance with NFPA-13.	13.7.4	A.7.13.1
C NC N/A U	**HR—not required; LS—LMH; PR—LMH**. FLEXIBLE COUPLINGS: Fire suppression piping has flexible couplings in accordance with NFPA-13.	13.7.4	A.7.13.2
C NC N/A U	**HR—not required; LS—LMH; PR—LMH**. EMERGENCY POWER: Equipment used to power or control Life Safety systems is anchored or braced.	13.7.7	A.7.12.1
C NC N/A U	**HR—not required; LS—LMH; PR—LMH**. STAIR AND SMOKE DUCTS: Stair pressurization and smoke control ducts are braced and have flexible connections at seismic joints.	13.7.6	A.7.14.1
C NC N/A U	**HR—not required; LS—MH; PR—MH**. SPRINKLER CEILING CLEARANCE: Penetrations through panelized ceilings for fire suppression devices provide clearances in accordance with NFPA-13.	13.7.4	A.7.13.3
C NC N/A U	**HR—not required; LS—not required; PR—LMH**. EMERGENCY LIGHTING: Emergency and egress lighting equipment is anchored or braced.	13.7.9	A.7.3.1
Hazardous Materials			
C NC N/A U	**HR—LMH; LS—LMH; PR—LMH**. HAZARDOUS MATERIAL EQUIPMENT: Equipment mounted on vibration isolators and containing hazardous material is equipped with restraints or snubbers.	13.7.1	A.7.12.2
C NC N/A U	**HR—LMH; LS—LMH; PR—LMH**. HAZARDOUS MATERIAL STORAGE: Breakable containers that hold hazardous material, including gas cylinders, are restrained by latched doors, shelf lips, wires, or other methods.	13.8.3	A.7.15.1
C NC N/A U	**HR—MH; LS—MH; PR—MH**. HAZARDOUS MATERIAL DISTRIBUTION: Piping or ductwork conveying hazardous materials is braced or otherwise protected from damage that would allow hazardous material release.	13.7.3 13.7.5	A.7.13.4
C NC N/A U	**HR—MH; LS—MH; PR—MH**. SHUTOFF VALVES: Piping containing hazardous material, including natural gas, has shutoff valves or other devices to limit spills or leaks.	13.7.3 13.7.5	A.7.13.3
C NC N/A U	**HR—LMH; LS—LMH; PR—LMH**. FLEXIBLE COUPLINGS: Hazardous material ductwork and piping, including natural gas piping, have flexible couplings.	13.7.3 13.7.5	A.7.15.4
C NC N/A U	**HR—MH; LS—MH; PR—MH**. PIPING OR DUCTS CROSSING SEISMIC JOINTS: Piping or ductwork carrying hazardous material that either crosses seismic joints or isolation planes or is connected to independent structures has couplings or other details to accommodate the relative seismic displacements.	13.7.3 13.7.5 13.7.6	A.7.13.6
Partitions			
C NC N/A U	**HR—LMH; LS—LMH; PR—LMH**. UNREINFORCED MASONRY: Unreinforced masonry or hollow-clay tile partitions are braced at a spacing of at most 10 ft (3.0 m) in Low or Moderate Seismicity, or at most 6 ft (1.8 m) in High Seismicity.	13.6.2	A.7.1.1
C NC N/A U	**HR—LMH; LS—LMH; PR—LMH**. HEAVY PARTITIONS SUPPORTED BY CEILINGS: The tops of masonry or hollow-clay tile partitions are not laterally supported by an integrated ceiling system.	13.6.2	A.7.2.1
C NC N/A U	**HR—not required; LS—MH; PR—MH**. DRIFT: Rigid cementitious partitions are detailed to accommodate the following drift ratios: in steel moment frame, concrete moment frame, and wood frame buildings, 0.02; in other buildings, 0.005.	13.6.2	A.7.1.2
C NC N/A U	**HR—not required; LS—not required; PR—MH**. LIGHT PARTITIONS SUPPORTED BY CEILINGS: The tops of gypsum board partitions are not laterally supported by an integrated ceiling system.	13.6.2	A.7.2.1
C NC N/A U	**HR—not required; LS—not required; PR—MH**. STRUCTURAL SEPARATIONS: Partitions that cross structural separations have seismic or control joints.	13.6.2	A.7.1.3

continues

Table 17-38 *(Continued)*. Nonstructural Checklist

Status	Evaluation Statement[a,b]	Tier 2 Reference	Commentary Reference
C NC N/A U	**HR—not required; LS—not required; PR—MH**. TOPS: The tops of ceiling-high framed or panelized partitions have lateral bracing to the structure at a spacing equal to or less than 6 ft (1.8 m).	13.6.2	A.7.1.4
Ceilings			
C NC N/A U	**HR—H; LS—MH; PR—LMH**. SUSPENDED LATH AND PLASTER: Suspended lath and plaster ceilings have attachments that resist seismic forces for every 12 ft^2 (1.1 m^2) of area.	13.6.4	A.7.2.3
C NC N/A U	**HR—not required; LS—MH; PR—LMH**. SUSPENDED GYPSUM BOARD: Suspended gypsum board ceilings have attachments that resist seismic forces for every 12 ft^2 (1.1 m^2) of area.	13.6.4	A.7.2.3
C NC N/A U	**HR—not required; LS—not required; PR—MH**. INTEGRATED CEILINGS: Integrated suspended ceilings with continuous areas greater than 144 ft^2 (13.4 m^2) and ceilings of smaller areas that are not surrounded by restraining partitions are laterally restrained at a spacing no greater than 12 ft (3.6 m) with members attached to the structure above. Each restraint location has a minimum of four diagonal wires and compression struts, or diagonal members capable of resisting compression.	13.6.4	A.7.2.2
C NC N/A U	**HR—not required; LS—not required; PR—MH**. EDGE CLEARANCE: The free edges of integrated suspended ceilings with continuous areas greater than 144 ft^2 (13.4 m^2) have clearances from the enclosing wall or partition of at least the following: in Moderate Seismicity, 1/2 in. (13 mm); in High Seismicity, 3/4 in. (19 mm).	13.6.4	A.7.2.4
C NC N/A U	**HR—not required; LS—not required; PR—MH**. CONTINUITY ACROSS STRUCTURE JOINTS: The ceiling system does not cross any seismic joint and is not attached to multiple independent structures.	13.6.4	A.7.2.5
C NC N/A U	**HR—not required; LS—not required; PR—H**. EDGE SUPPORT: The free edges of integrated suspended ceilings with continuous areas greater than 144 ft^2 (13.4 m^2) are supported by closure angles or channels not less than 2 in. (51 mm) wide.	13.6.4	A.7.2.6
C NC N/A U	**HR—not required; LS—not required; PR—H**. SEISMIC JOINTS: Acoustical tile or lay-in panel ceilings have seismic separation joints such that each continuous portion of the ceiling is no more than 2,500 ft^2 (232.3 m^2) and has a ratio of long-to-short dimension no more than 4-to-1.	13.6.4	A.7.2.7
Light Fixtures			
C NC N/A U	**HR—not required; LS—MH; PR—MH**. INDEPENDENT SUPPORT: Light fixtures that weigh more per square foot than the ceiling they penetrate are supported independent of the grid ceiling suspension system by a minimum of two wires at diagonally opposite corners of each fixture.	13.6.4 13.7.9	A.7.3.2
C NC N/A U	**HR—not required; LS—not required; PR—H**. PENDANT SUPPORTS: Light fixtures on pendant supports are attached at a spacing equal to or less than 6 ft. Unbraced suspended fixtures are free to allow a 360-degree range of motion at an angle not less than 45 degrees from horizontal without contacting adjacent components. Alternatively, if rigidly supported and/or braced, they are free to move with the structure to which they are attached without damaging adjoining components. Additionally, the connection to the structure is capable of accommodating the movement without failure.	13.7.9	A.7.3.3
C NC N/A U	**HR—not required; LS—not required; PR—H**. LENS COVERS: Lens covers on light fixtures are attached with safety devices.	13.7.9	A.7.3.4
Cladding and Glazing			
C NC N/A U	**HR—MH; LS—MH; PR—MH**. CLADDING ANCHORS: Cladding components weighing more than 10 lb/ft^2 (0.48 kN/m^2) are mechanically anchored to the structure at a spacing equal to or less than the following: for Life Safety in Moderate Seismicity, 6 ft (1.8 m); for Life Safety in High Seismicity and for Position Retention in any seismicity, 4 ft (1.2 m)	13.6.1	A.7.4.1

continues

Table 17-38 *(Continued)*. Nonstructural Checklist

Status	Evaluation Statement[a,b]	Tier 2 Reference	Commentary Reference
C NC N/A U	HR—not required; **LS—MH; PR—MH**. CLADDING ISOLATION: For steel or concrete moment-frame buildings, panel connections are detailed to accommodate a story drift ratio by the use of rods attached to framing with oversize holes or slotted holes of at least the following: for Life Safety in Moderate Seismicity, 0.01; for Life Safety in High Seismicity and for Position Retention in any seismicity, 0.02, and the rods have a length-to-diameter ratio of 4.0 or less.	13.6.1	A.7.4.3
C NC N/A U	**HR—MH; LS—MH; PR—MH**. MULTI-STORY PANELS: For multi-story panels attached at more than one floor level, panel connections are detailed to accommodate a story drift ratio by the use of rods attached to framing with oversize holes or slotted holes of at least the following: for Life Safety in Moderate Seismicity, 0.01; for Life Safety in High Seismicity and for Position Retention in any seismicity, 0.02, and the rods have a length-to-diameter ratio of 4.0 or less.	13.6.1	A.7.4.4
C NC N/A U	HR—not required; **LS—MH; PR—MH**. THREADED RODS: Threaded rods for panel connections detailed to accommodate drift by bending of the rod have a length-to-diameter ratio greater than 0.06 times the story height in inches for Life Safety in Moderate Seismicity and 0.12 times the story height in inches for Life Safety in High Seismicity and Position Retention in any seismicity.	13.6.1	A.7.4.9
C NC N/A U	**HR—MH; LS—MH; PR—MH**. PANEL CONNECTIONS: Cladding panels are anchored out of plane with a minimum number of connections for each wall panel, as follows: for Life Safety in Moderate Seismicity, 2 connections; for Life Safety in High Seismicity and for Position Retention in any seismicity, 4 connections.	13.6.1.4	A.7.4.5
C NC N/A U	**HR—MH; LS—MH; PR—MH**. BEARING CONNECTIONS: Where bearing connections are used, there is a minimum of two bearing connections for each cladding panel.	13.6.1.4	A.7.4.6
C NC N/A U	**HR—MH; LS—MH; PR—MH**. INSERTS: Where concrete cladding components use inserts, the inserts have positive anchorage or are anchored to reinforcing steel.	13.6.1.4	A.7.4.7
C NC N/A U	HR—not required; **LS—MH; PR—MH**. OVERHEAD GLAZING: Glazing panes of any size in curtain walls and individual interior or exterior panes more than 16 ft^2 (1.5 m^2) in area are laminated annealed or laminated heat-strengthened glass and are detailed to remain in the frame when cracked.	13.6.1.5	A.7.4.8
Masonry Veneer			
C NC N/A U	HR—not required; **LS—LMH; PR—LMH**. TIES: Masonry veneer is connected to the backup with corrosion-resistant ties. There is a minimum of one tie for every 2-2/3 ft^2 (0.25 m^2), and the ties have spacing no greater than the following: for Life Safety in Low or Moderate Seismicity, 36 in. (914 mm); for Life Safety in High Seismicity and for Position Retention in any seismicity, 24 in. (610 mm).	13.6.1.2	A.7.5.1
C NC N/A U	HR—not required; **LS—LMH; PR—LMH**. SHELF ANGLES: Masonry veneer is supported by shelf angles or other elements at each floor above the ground floor.	13.6.1.2	A.7.5.2
C NC N/A U	HR—not required; **LS—LMH; PR—LMH**. WEAKENED PLANES: Masonry veneer is anchored to the backup adjacent to weakened planes, such as at the locations of flashing.	13.6.1.2	A.7.5.3
C NC N/A U	**HR—LMH; LS—LMH; PR—LMH**. UNREINFORCED MASONRY BACKUP: There is no unreinforced masonry backup.	13.6.1.1 13.6.1.2	A.7.7.2
C NC N/A U	HR—not required; **LS—MH; PR—MH**. STUD TRACKS: For veneer with cold-formed steel stud backup, stud tracks are fastened to the structure at a spacing equal to or less than 24 in. (610 mm) on center.	13.6.1.1 13.6.1.2	A.7.6.1

continues

Table 17-38 *(Continued)*. Nonstructural Checklist

Status	Evaluation Statement[a,b]	Tier 2 Reference	Commentary Reference
C NC N/A U	**HR—not required; LS—MH; PR—MH**. ANCHORAGE: For veneer with concrete block or masonry backup, the backup is positively anchored to the structure at a horizontal spacing equal to or less than 4 ft along the floors and roof.	13.6.1.1 13.6.1.2	A.7.7.1
C NC N/A U	**HR—not required; LS—not required; PR—MH**. WEEP HOLES: In veneer anchored to stud walls, the veneer has functioning weep holes and base flashing.	13.6.1.2	A.7.5.6
C NC N/A U	**HR—not required; LS—not required; PR—MH**. OPENINGS: For veneer with cold-formed-steel stud backup, steel studs frame window and door openings.	13.6.1.1 13.6.1.2	A.7.6.2
Parapets, Cornices, Ornamentation, and Appendages			
C NC N/A U	**HR—LMH; LS—LMH; PR—LMH**. URM PARAPETS OR CORNICES: Laterally unsupported unreinforced masonry parapets or cornices have height-to-thickness ratios no greater than the following: for Life Safety in Low or Moderate Seismicity, 2.5; for Life Safety in High Seismicity and for Position Retention in any seismicity, 1.5.	13.6.5	A.7.8.1
C NC N/A U	**HR—not required; LS—LMH; PR—LMH**. CANOPIES: Canopies at building exits are anchored to the structure at a spacing no greater than the following: for Life Safety in Low or Moderate Seismicity, 10 ft (3.0 m); for Life Safety in High Seismicity and for Position Retention in any seismicity, 6 ft (1.8 m).	13.6.6	A.7.8.2
C NC N/A U	**HR—H; LS—MH; PR—LMH**. CONCRETE PARAPETS: Concrete parapets with height-to-thickness ratios greater than 2.5 have vertical reinforcement.	13.6.5	A.7.8.3
C NC N/A U	**HR—MH; LS—MH; PR—LMH**. APPENDAGES: Cornices, parapets, signs, and other ornamentation or appendages that extend above the highest point of anchorage to the structure or cantilever from components are reinforced and anchored to the structural system at a spacing equal to or less than 6 ft (1.8 m). This evaluation statement item does not apply to parapets or cornices covered by other evaluation statements.	13.6.6	A.7.8.4
Masonry Chimneys			
C NC N/A U	**HR—LMH; LS—LMH; PR—LMH**. URM CHIMNEYS: Unreinforced masonry chimneys extend above the roof surface no more than the following: for Life Safety in Low or Moderate Seismicity, 3 times the least dimension of the chimney; for Life Safety in High Seismicity and for Position Retention in any seismicity, 2 times the least dimension of the chimney.	13.6.7	A.7.9.1
C NC N/A U	**HR—LMH; LS—LMH; PR—LMH**. ANCHORAGE: Masonry chimneys are anchored at each floor level, at the topmost ceiling level, and at the roof.	13.6.7	A.7.9.2
Stairs			
C NC N/A U	**HR—not required; LS—LMH; PR—LMH**. STAIR ENCLOSURES: Hollow-clay tile or unreinforced masonry walls around stair enclosures are restrained out of plane and have height-to-thickness ratios not greater than the following: for Life Safety in Low or Moderate Seismicity, 15-to-1; for Life Safety in High Seismicity and for Position Retention in any seismicity, 12-to-1.	13.6.2 13.6.8	A.7.10.1
C NC N/A U	**HR—not required; LS—LMH; PR—LMH**. STAIR DETAILS: The connection between the stairs and the structure does not rely on post-installed anchors in concrete or masonry, and the stair details are capable of accommodating the drift calculated using the Quick Check procedure of Section 4.4.3.1 for moment-frame structures or 0.5 in. for all other structures without including any lateral stiffness contribution from the stairs.	13.6.8	A.7.10.2
Contents and Furnishings			
C NC N/A U	**HR—LMH; LS—MH; PR—MH**. INDUSTRIAL STORAGE RACKS: Industrial storage racks or pallet racks more than 12 ft high meet the requirements of ANSI/RMI MH 16.1 as modified by ASCE 7, Chapter 15.	13.8.1	A.7.11.1

continues

Table 17-38 *(Continued)*. Nonstructural Checklist

Status	Evaluation Statement[a,b]	Tier 2 Reference	Commentary Reference
C NC N/A U	**HR—not required; LS—H; PR—MH**. TALL NARROW CONTENTS: Contents more than 6 ft (1.8 m) high with a height-to-depth or height-to-width ratio greater than 3-to-1 are anchored to the structure or to each other.	13.8.2	A.7.11.2
C NC N/A U	**HR—not required; LS—H; PR—H**. FALL-PRONE CONTENTS: Equipment, stored items, or other contents weighing more than 20 lb (9.1 kg) whose center of mass is more than 4 ft (1.2 m) above the adjacent floor level are braced or otherwise restrained.	13.8.2	A.7.11.3
C NC N/A U	**HR—not required; LS—not required; PR—MH**. ACCESS FLOORS: Access floors more than 9 in. (229 mm) high are braced.	13.6.10	A.7.11.4
C NC N/A U	**HR—not required; LS—not required; PR—MH**. EQUIPMENT ON ACCESS FLOORS: Equipment and other contents supported by access floor systems are anchored or braced to the structure independent of the access floor.	13.7.7 13.6.10	A.7.11.5
C NC N/A U	**HR—not required; LS—not required; PR—H**. SUSPENDED CONTENTS: Items suspended without lateral bracing are free to swing from or move with the structure from which they are suspended without damaging themselves or adjoining components.	13.8.2	A.7.11.6
Mechanical and Electrical Equipment			
C NC N/A U	**HR—not required; LS—H; PR—H**. FALL-PRONE EQUIPMENT: Equipment weighing more than 20 lb (9.1 kg) whose center of mass is more than 4 ft (1.2 m) above the adjacent floor level, and which is not in-line equipment, is braced.	13.7.1 13.7.7	A.7.12.4
C NC N/A U	**HR—not required; LS—H; PR—H**. IN-LINE EQUIPMENT: Equipment installed in line with a duct or piping system, with an operating weight more than 75 lb (34.0 kg), is supported and laterally braced independent of the duct or piping system.	13.7.1	A.7.12.5
C NC N/A U	**HR—not required; LS—H; PR—MH**. TALL NARROW EQUIPMENT: Equipment more than 6 ft (1.8 m) high with a height-to-depth or height-to-width ratio greater than 3-to-1 is anchored to the floor slab or adjacent structural walls.	13.7.1 13.7.7	A.7.12.6
C NC N/A U	**HR—not required; LS—not required; PR—MH**. MECHANICAL DOORS: Mechanically operated doors are detailed to operate at a story drift ratio of 0.01.	13.6.9	A.7.12.7
C NC N/A U	**HR—not required; LS—not required; PR—H**. SUSPENDED EQUIPMENT: Equipment suspended without lateral bracing is free to swing from or move with the structure from which it is suspended without damaging itself or adjoining components.	13.7.1 13.7.7	A.7.12.8
C NC N/A U	**HR—not required; LS—not required; PR—H**. VIBRATION ISOLATORS: Equipment mounted on vibration isolators is equipped with horizontal restraints or snubbers and with vertical restraints to resist overturning.	13.7.1	A.7.12.9
C NC N/A U	**HR—not required; LS—not required; PR—H**. HEAVY EQUIPMENT: Floor-supported or platform-supported equipment weighing more than 400 lb (181.4 kg) is anchored to the structure.	13.7.1 13.7.7	A.7.12.10
C NC N/A U	**HR—not required; LS—not required; PR—H**. ELECTRICAL EQUIPMENT: Electrical equipment is laterally braced to the structure.	13.7.7	A.7.12.11
C NC N/A U	**HR—not required; LS—not required; PR—H**. CONDUIT COUPLINGS: Conduit greater than 2.5 in. (64 mm) trade size that is attached to panels, cabinets, or other equipment and is subject to relative seismic displacement has flexible couplings or connections.	13.7.8	A.7.12.12
Piping			
C NC N/A U	**HR—not required; LS—not required; PR—H**. FLEXIBLE COUPLINGS: Fluid and gas piping has flexible couplings.	13.7.3 13.7.5	A.7.13.2

continues

Table 17-38 *(Continued)*. Nonstructural Checklist

Status	Evaluation Statement[a,b]	Tier 2 Reference	Commentary Reference
C NC N/A U	**HR—not required; LS—not required; PR—H**. FLUID AND GAS PIPING: Fluid and gas piping is anchored and braced to the structure to limit spills or leaks.	13.7.3 13.7.5	A.7.13.4
C NC N/A U	**HR—not required; LS—not required; PR—H**. C-CLAMPS: One-sided C-clamps that support piping larger than 2.5 in. (64 mm) in diameter are restrained.	13.7.3 13.7.5	A.7.13.5
C NC N/A U	**HR—not required; LS—not required; PR—H**. PIPING CROSSING SEISMIC JOINTS: Piping that crosses seismic joints or isolation planes or is connected to independent structures has couplings or other details to accommodate the relative seismic displacements.	13.7.3 13.7.5	A.7.13.6
Ducts			
C NC N/A U	**HR—not required; LS—not required; PR—H**. DUCT BRACING: Rectangular ductwork larger than 6 ft^2 (0.56 m^2) in cross-sectional area and round ducts larger than 28 in. (711 mm) in diameter are braced. The maximum spacing of transverse bracing does not exceed 30 ft (9.2 m). The maximum spacing of longitudinal bracing does not exceed 60 ft (18.3 m).	13.7.6	A.7.14.2
C NC N/A U	**HR—not required; LS—not required; PR—H**. DUCT SUPPORT: Ducts are not supported by piping or electrical conduit.	13.7.6	A.7.14.3
C NC N/A U	**HR—not required; LS—not required; PR—H**. DUCTS CROSSING SEISMIC JOINTS: Ducts that cross seismic joints or isolation planes or are connected to independent structures have couplings or other details to accommodate the relative seismic displacements.	13.7.6	A.7.14.4
Elevators			
C NC N/A U	**HR—not required; LS—H; PR—H**. RETAINER GUARDS: Sheaves and drums have cable retainer guards.	13.7.11	A.7.16.1
C NC N/A U	**HR—not required; LS—H; PR—H**. RETAINER PLATE: A retainer plate is present at the top and bottom of both car and counterweight.	13.7.11	A.7.16.2
C NC N/A U	**HR—not required; LS—not required; PR—H**. ELEVATOR EQUIPMENT: Equipment, piping, and other components that are part of the elevator system are anchored.	13.7.11	A.7.16.3
C NC N/A U	**HR—not required; LS—not required; PR—H**. SEISMIC SWITCH: Elevators capable of operating at speeds of 150 ft/min (0.30 m/min) or faster are equipped with seismic switches that meet the requirements of ASME A17.1 or have trigger levels set to 20% of the acceleration of gravity at the base of the structure and 50% of the acceleration of gravity in other locations.	13.7.11	A.7.16.4
C NC N/A U	**HR—not required; LS—not required; PR—H**. SHAFT WALLS: Elevator shaft walls are anchored and reinforced to prevent toppling into the shaft during strong shaking.	13.7.11	A.7.16.5
C NC N/A U	**HR—not required; LS—not required; PR—H**. COUNTERWEIGHT RAILS: All counterweight rails and divider beams are sized in accordance with ASME A17.1.	13.7.11	A.7.16.6
C NC N/A U	**HR—not required; LS—not required; PR—H**. BRACKETS: The brackets that tie the car rails and the counterweight rail to the structure are sized in accordance with ASME A17.1.	13.7.11	A.7.16.7
C NC N/A U	**HR—not required; LS—not required; PR—H**. SPREADER BRACKET: Spreader brackets are not used to resist seismic forces.	13.7.11	A.7.16.8
C NC N/A U	**HR—not required; LS—not required; PR—H**. GO-SLOW ELEVATORS: The building has a go-slow elevator system.	13.7.11	A.7.16.9

Note: C = Compliant, NC = Noncompliant, N/A = Not Applicable, and U = Unknown.
[a] Performance Level: HR = Hazards Reduced, LS = Life Safety, and PR = Position Retention.
[b] Level of Seismicity: L = Low, M = Moderate, and H = High.

APPENDIX E: QUICK CHECK HAND CALCULATIONS

Project Calcs

tk1sc

Project Name:	Project No.:
Computed by:	Date:
	Page:
Checked by:	

Shear Stress Check

$V = C S_a W$

$S_a = 0.778g$ (from overturning check)

→ Original Building

$C = 1.3$ (1-Story, W2)

Building Area = 33,000 ft^2

Roof DL = 15 psf
Wall Weight Trib to Roof = 10 psf

$\Rightarrow W = (15psf + 10psf) \times 33{,}000\ ft^2 = 825\ k$

$V = 1.3 \times 0.778 \times 825k = 834\ k$

Shear Wall Capacity = 100 plf (Straight sheathing and gyp)

$M_s = \frac{4.5+3}{2} = 3.75$

Req'd Wall Length = $\frac{834k}{3.75 \times 100 plf} = 2224$ ft in each direction

NG by inspection

Project Calcs

tk1sc

Project Name:	Project No.:
Computed by:	Date:
	Page:
Checked by:	

→ 1970 Addition

C=1.3 (1-Story W2)
Building Area = 33'×80' = 2640 ft²
Roof DL = 15 psf
Wall Length = 4×33'+2×80' = 292 ft
Trib Wall Height = 6'
Wall DL = 8 psf

W = 15 psf × 2640 ft² + 8 psf × 6 ft × 292 ft = 53.6k

V = 1.3 × 0.778 × 53.6k = 54.2k

Shear Wall Capacity = 1,000 plf (Struct panel Sheathing)

Wall Length in Transverse Direction = 66 ft
Wall Length in Longitudinal Direction = 160 ft

$M_s = \frac{4.5+3}{2} = 3.75$

Long Dir: $f = \frac{1}{3.75} \times \frac{54.2k}{160 ft} = 90$ plf OK

Trans Dir: $f = \frac{1}{3.75} \times \frac{54.2k}{66 ft} = 219$ plf OK

Project Calcs

tk1sc

Project Name:	Project No.:
Computed by:	Date:
	Page:
Checked by:	

1990 Addition

$C = 1.0$

Area = 20,000 ft²
Roof DL = 20 psf

Concrete Wall Length = 70' + 70' + 104' + 104' = 348 ft
Concrete Wall DL = 6" x 150 pcf = 75 psf
Concrete Wall Trib Height = 15'

CMU Wall Length = 180' + 54' + 4x24' + 107' + 64' + 40' + 27' = 568 ft
CMU Wall DL = 83 psf
CMU Wall Trib Height = 10'

Wood Wall Length = 216' + 37' + 91' + 70' + 24' = 438'
Wood Wall DL = 8 psf
Wood Wall Trib Height = 10'

$W = 20\,psf \times 20{,}000\,ft^2 + 75\,psf \times 348' \times 15' + 83\,psf \times 568' \times 10' + 8\,psf \times 438' \times 10'$
$= 1300\,k$

$V = 1.0 \times 0.778 \times 1300\,k = 1{,}011\,k$

Distribute ½ to CMU walls and ½ to tilt-up walls

→ Tilt-Up Wall Check
$V = \frac{1}{2} \times 1{,}011\,k = 506\,k$
$L_{Trans} = 140'$
$L_{Long} = 208'$
Wall thickness = 6"

Project Calcs

tk1sc

Project Name:	Project No.:
Computed by:	Date:
	Page:
Checked by:	

$M_s = 3.75$

$f_{trans} = \frac{1}{3.75} \times \frac{506k}{140' \times 6''} = 134 psi$

$f_{long} = \frac{1}{3.75} \times \frac{506k}{208' \times 6''} = 9 psi$

Stress Limit = 160psi OK

→ CMU Wall Check

$V = \frac{1}{2} \times 1011k = 506k$

$L_{Trans} = 64' + 105' = 169 ft$

$L_{Long} = 180' + 46' + 39' + 106' = 371 ft$

Stress Limit = 70psi

$f_{Trans} = \frac{1}{3.75} \times \frac{506k}{169' \times 7.625''} = 8.7 psi < Limit$ OK

$f_{Long} = \frac{1}{3.75} \times \frac{506k}{371' \times 7.625''} = 4 psi < Limit$

Project Calcs

tk1sc

Project Name:	Project No.:
Computed by:	Date:
	Page:
Checked by:	

OVERTURNING

$S_{xs} = 0.778g$
$S_{x1} = 0.570g$

$T = C_t h_n^{\beta}$

→ Original Building

$C_t = 0.02$
$\beta = 0.75$
$h_n = 27'$

$T = 0.02 \times 27^{0.75} = 0.24$

$S_a = \frac{0.570}{0.24} = 2.375 < 0.778$

$0.6S_a = 0.6 \times 0.778 = 0.467$

$\frac{B}{h} = \frac{136}{27} = 5 >> 0.6S_a$ OK

→ 1970 Addition

$h_n = 13'$
$T = 0.02 \times 13^{0.75} = 0.137$

$S_a = \frac{0.570}{0.137} = 4.16 < 0.778$

$0.6S_a = 0.6 \times 0.778 = 0.467$

$\frac{B}{h} = \frac{33'}{13'} = 2.54 >> 0.6S_a$ OK

Project Calcs

tk1sc

Project Name:	Project No.:
Computed by:	Date:
	Page:
Checked by:	

→ 1990 Addition

$C_t = 0.02$
$\beta = 0.75$
$h_n = 30'$

$T = 0.02 \times 30^{0.75} = 0.26$

$S_a = \frac{0.57}{0.26} = 2.22 < 0.778$
$0.6 S_a = 0.6 \times 0.778 = 0.467$

$\frac{B}{h} = \frac{100'}{30'} = 3.33 >> 0.6 S_a$ <u>ok</u>

APPENDIX F: COST ESTIMATES

COST SUMMARY ESTIMATE

Description		Unit Cost	Number of Units		Total Cost
Shear wall improvements	$	450.00	1000 lf	$	450,000.00
Blocking and plate connections at roof diaphragm	$	75.00	1500 lf	$	112,500.00
Wood Shear wall foundation connections	$	75.00	1500 lf	$	112,500.00
Post Connections (Top and Bottom)	$	200.00	50 ea	$	10,000.00
Diaphragm Improvement (Overlay and Blocking)	$	40.00	11500 sf	$	460,000.00
Tilt-up wall diaphragm connection improvements	$	150.00	200 lf	$	30,000.00
URM Chimney (Infill or Bracing)	$	15,000.00	1 ea	$	15,000.00
Geotechnical Study	$	7,500.00	1 ea	$	7,500.00
Shut off valves and flexible couplings	$	10,000.00	1 ea	$	10,000.00
			Sub Total	=	$ 1,207,500.00
			Soft Costs	=	$ 483,000.00
			Total Cost	=	**$ 1,690,500.00**

Note:
This estimate includes allowances for selective demolition and modest replacement of architectural materials, including wall finishes, trim, and roofing.

GERVAIS MIDDLE SCHOOL

300 Douglas Avenue NE
Gervais, OR 97026

SEISMIC EVALUATION REPORT

Prepared By:
tk1sc
616 1st Avenue, Suite 500
Seattle, WA 98104

Report Date: March 27, 2020
Project Number: 2020-0057

Prepared For:
Gervais School District
290 1st Street
Gervais, OR 97026

Table of Contents

INTRODUCTION 2
APPLICABLE CODES AND STANDARDS 2
SITE OBSERVATIONS 2
BUILDING DESCRIPTION 2
CONSTRUCTION TYPES AND BENCHMARKING 3
BUILDING INFORMATION AND EVALUATION CRITERIA 5
RECOMMENDATIONS 6
APPENDIX A: GLOSSARY OF TERMS 7
APPENDIX B: SITE PLAN 9

INTRODUCTION

tk1sc has performed a seismic assessment of Gervais Middle School in Gervais, Oregon, based on the Tier 1 screening procedure per ASCE 41-17. The building being evaluated is located at 300 Douglas Avenue NE, Gervais, OR 97026.

Using the ASCE 41-17 standard, structural components were evaluated to the "Limited Safety" performance level and non-structural components were evaluated to the "Hazards Reduced" performance level to identify potential deficiencies and provide recommendations for further investigation as well as possible upgrade solutions to mitigate these deficiencies.

APPLICABLE CODES AND STANDARDS

Below is a list of governing building codes (original and current), as well as the applicable seismic evaluation and retrofit standard:

CODES AND STANDARDS	
Original Governing Building Code:	2013 Modular Building – 2010 Oregon Structural Specialty Code 2014 Relocated Modular Building (Built 1999) – Assumed 1997 UBC 2014 Gym Building – Assumed 2010 Oregon Structural Specialty Code
Current Governing Building Code:	2014 Oregon Structural Specialty Code
Seismic Eval/Retrofit Referenced Standard:	American Society of Civil Engineers, "Seismic Evaluation and Retrofit of Existing Buildings" (ASCE 41-17)

SITE OBSERVATIONS

A site observation was performed by Jason Tornquist, PE, SE, and Ryan Kellberg, PE on February 24th, 2020, in order to assess the overall condition of the facility, as well as to verify general conformance of the existing conditions with the available structural drawings. The drawings to be used for the seismic assessment of the facility consist of:

- 2013 Modular Building: 64'X191' Classroom Gervais Middle School Drawings, prepared by Modern Building Systems, Inc and dated 4/19/13.

No demolition or invasive investigation was performed as part of this site visit, and as such, the investigation was limited to exposed structural elements visible from readily accessible spaces, as well as spaces above lay-in ceiling tile.

BUILDING DESCRIPTION

The facility located at 300 Douglas Avenue NE, Gervais, OR 97026 is comprised of three buildings. A 64 ft by 191 ft modular classroom building was constructed in 2013. Another modular building was added to the site in 2014 measuring approximately 64 ft by 72 ft, however, this building was constructed in 1999 and later relocated at the Gervais Middle School site. The third building on the site is a pre-engineered gym that was constructed on site in 2014 measuring approximately 100 ft by 150 ft. See Figure 1 below for site and building layout.

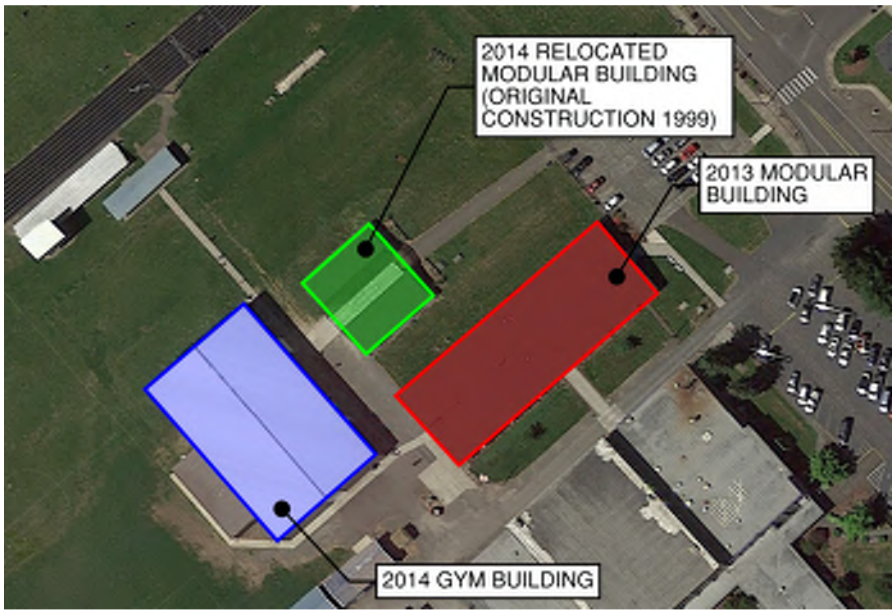

Figure 1 - Site Orientation Plan

Based the available information, per ASCE 41-17, section 3.3, the 2002 addition, the auxiliary gym, and the weight room are all considered "benchmark buildings". Due to the age and original design codes for those facilities, they are all deemed to comply with the provisions of the ASCE 41-17 standard for the purposes of this assessment. Any descriptions of the systems in those structures are provided for reference only; a complete seismic assessment of those areas was not performed.

CONSTRUCTION TYPES AND BENCHMARKING

The construction types of each portion of the facility consists of the following elements:

- 2013 Modular Building: This building is constructed with plywood roof sheathing over wood roof trusses, supported by wood stud bearing walls on a shallow foundation system. The lateral force resisting system utilizes flexible plywood diaphragms to transfer force into plywood sheathed wood stud walls. This most closely resembles construction type W2 as defined in ASCE 41-17 as follows:

  > *"These buildings are commercial or industrial buildings with a floor area of 5,000 ft^2 or more. There are few, if any, interior walls. The floor and roof framing consists of wood or steel trusses, glulam or steel beams, and wood posts or steel columns. The foundation system is permitted to consist of a variety of elements. Seismic forces are resisted by flexible diaphragms and exterior walls sheathed with plywood, oriented strand board, stucco, plaster, or straight or diagonal wood sheathing, or they are permitted to be braced with various forms of bracing. Wall openings for storefronts and garages, where present, are framed by post-and-beam framing."*

  As this building was constructed under the 2010 OSSC (which is based on the 2009 IBC), this building is classified as a benchmark building, and no further evaluation or retrofit will be necessary. See Figure 2 below for a complete list of benchmark building codes for each construction type.
- 2014 Relocated Modular Building (Constructed in 1999): This building is constructed with plywood roof sheathing over wood roof trusses, supported by wood stud bearing walls on a

shallow foundation system. The lateral force resisting system utilizes flexible plywood diaphragms to transfer force into plywood sheathed wood stud walls. This most closely resembles construction type W2 as defined above. Because this building was constructed in 1999, likely under the 1997 UBC, this building is classified as a benchmark building, and no further evaluation or retrofit will be necessary. See Figure 2 below for a complete list of benchmark building codes for each construction type.

- 2014 Gym Building: This is a pre-engineered steel building. Untopped metal roof deck is supported by tapered steel wide flange beams and tapered steel wide flange columns most likely on a shallow foundation system. Lateral loads are resisted by steel moment frames in the transverse direction and steel tension rod X braces in the longitudinal direction. This most closely resembles construction type S3 as defined in ASCE 41-17 as follows:

  > *"These buildings use transverse steel moment frames. They are one story high, but they sometimes have mezzanines. The roof and walls consist of lightweight metal, fiberglass, or cementitious panels. The frames are designed for maximum efficiency, and the beams and columns are permitted to consist of either web-tapered or prismatic built-up sections with thin plates. The frames are built in segments and assembled in the field with bolted or welded joints. Seismic forces in the transverse direction are resisted by wall panel shear elements or rod bracing. Diaphragm forces are resisted by untopped metal deck, roof panel shear elements, or a system of tension-only rod bracing. The foundation system is permitted consist of a variety of elements."*

  Because this building was likely constructed in 2014, likely under the 2010 OSSC, this building is classified as a benchmark building, and no further evaluation or retrofit will be necessary. See Figure 2 below for a complete list of benchmark building codes for each construction type.

Downloaded from ascelibrary.org by Jason Tornatore on 10/15/19. Copyright ASCE. For personal use only; all rights reserved.

Table 3-2. Benchmark Building Codes and Standards for Life Safety Structural Performance at BSE-1E

	Building Seismic Design Provisions				Seismic Evaluation or Retrofit Provisions		
						FEMA 310[d] (1998a)/	FEMA 356[e] (2000)/
Wood frame, wood shear panels (Types W1 and W2)	1993	1976	2000	1985	[f]	1998	2000
Wood frame, wood shear panels (Type W1a)	[f]	1997	2000	1997	[f]	1998	2000
Steel moment-resisting frame (Types S1 and S1a)	[f]	1994[g]	2000	1997	[f]	1998	2000
Steel concentrically braced frame (Types S2 and S2a)	[f]	1997	2000	[f]	[f]	1998	2000
Steel eccentrically braced frame (Types S2 and S2a)	[f]	1988[g]	2000	1997	[f]	[f]	2000
Buckling-restrained braced frame (Types S2 and S2a)	[f]	[f]	2006	[f]	[f]	[f]	2000
Metal building frames (Type S3)	[f]	[f]	2000	[f]	1992	1998	2000
Steel frame with concrete shear walls (Type S4)	1993	1994	2000	1985	[f]	1998	2000
Steel frame with URM infill (Types S5 and S5a)	[f]	[f]	2000	[f]	[f]	1998	2000
Steel plate shear wall (Type S6)	[f]	[f]	2006	[f]	[f]	[f]	2000
Cold-formed steel light-frame construction—shear wall system (Type CFS1)	[f]	1997[h]	2000	1997[h]	[f]	[f]	2000[h]
Cold-formed steel light-frame construction—strap-braced wall system (Type CFS2)	[f]	[f]	2003	2003	[f]	[f]	[f]
Reinforced concrete moment-resisting frame (Type C1)[i]	1993	1994	2000	1997	[f]	1998	2000
Reinforced concrete shear walls (Types C2 and C2a)	1993	1994	2000	1985	[f]	1998	2000
Concrete frame with URM infill (Types C3 and C3a)	[f]	[f]	2000	[f]	[f]	1998	2000
Tilt-up concrete (Types PC1 and PC1a)	[f]	1997	2000	[f]	[f]	1998	2000
Precast concrete frame (Types PC2 and PC2a)	[f]	[f]	2000	[f]	1992	1998	2000
Reinforced masonry (Type RM1)	[f]	1997	2000	[f]	[f]	1998	2000
Reinforced masonry (Type RM2)	1993	1994	2000	1985	[f]	1998	2000
Unreinforced masonry (Type URM)	[f]	[f]	2000	[f]	[f]	[f]	2000
Unreinforced masonry (Type URMa)	[f]	[f]	2000	[f]	[f]	1998	2000
Seismic isolation or passive dissipation	[f]	1991	2000	[f]	[f]	[f]	2000

Note: NBC = *National Building Code*; SBC = *Standard Building Code*; UBC = *Uniform Building Code*; IBC = *International Building Code*; NEHRP = FEMA 368 and 369, *NEHRP Recommended Provisions for the Development of Seismic Regulations for New Buildings* (BSSC 2000), FEMA 178, FEMA 310, FEMA 356, ASCE 31-03, ASCE 41-06, and ASCE 41-13.

[a] Building type refers to one of the common building types defined in Table 3-1.

[b] Buildings on hillside sites shall not be considered Benchmark Buildings.

[c] For buildings at Very Low Seismicity, the benchmark provisions shall be limited to the IBC, FEMA 310/ASCE 31, and FEMA 356/ASCE 41.

[d] Life Safety Structural Performance Level for the seismic hazard as defined by those provisions.

[e] Life Safety Structural Performance Level for the BSE-1 seismic hazard as defined by those provisions.

[f] No benchmark year; buildings shall be evaluated using this standard.

[g] Steel moment-resisting frames and eccentrically braced frames with links adjacent to columns shall comply with the 1994 UBC Emergency Provisions, published September/October 1994, or subsequent requirements.

[h] Cold-formed steel shear walls with wood structural panels only.

[i] Flat slab concrete moment frames shall not be considered Benchmark Buildings.

Figure 2 - ASCE 41-17 Table 3.2. Benchmark Building Codes

BUILDING INFORMATION AND EVALUATION CRITERIA

The following is a summary of parameters used for the seismic evaluation of the building per ASCE 41-17:

BUILDING INFORMATION	
Site Latitude and Longitude:	45.104608, -122.896144
Year Built:	1999, 2013, 2014
Number of Stories:	1
Structural Performance Level:	Limited Safety (S-4)
Nonstructural Performance Level:	Hazards Reduced (N-D)
Design Spectral Response Acceleration Parameters:	S_{XS} = 0.778g (BSE-2E, 975-year return period) S_{X1} = 0.570g (BSE-2E, 975-year return period) S_a = 0.778g
Level of Seismicity:	High
Structure Type:	W2 and S3
Benchmark Building:	Yes (All 3)

RECOMMENDATIONS

Based on the investigation performed, all three buildings at the Gervais Middle School facility meet the requirements to be considered benchmark buildings, as they were designed and constructed in accordance an appropriate building code that meets the standard. As such, no seismic retrofit or rehabilitation efforts are warranted or recommended at this time.

APPENDIX A: GLOSSARY OF TERMS

Tier 1 Screening - The purpose of the Tier 1 screening phase of the evaluation process is to quickly identify buildings that comply with the provisions of this standard. A Tier 1 screening also familiarizes the design professional with the building, its potential deficiencies, and its potential behavior. A Tier 1 screening is required for all buildings so that potential deficiencies may be quickly identified. Further evaluation using a Tier 2 or Tier 3 evaluation then focuses, at a minimum, on the potential deficiencies identified in Tier 1.

Tier 2 Deficiency-Based Evaluation - The Tier 2 deficiency-based evaluation requires additional analysis and evaluation of all the potential deficiencies identified in the Tier 1 screening (denoted by either "Noncompliant" or "Unknown" responses in the Tier 1 checklists). The additional analysis and evaluation of each potential deficiency shall be sufficient to either confirm the deficiency or demonstrate the adequacy of the structure as it relates to the potential deficiency. The scope of the Tier 2 deficiency-based evaluation need not expand beyond the evaluation of the potential deficiencies identified in the Tier 1 screening.

Tier 3 Systematic Procedure - The Tier 3 systematic procedure involves an analysis of the entire building, either in its current condition or with proposed retrofit measures. These procedures shall be used where systematic procedures are required in accordance with ASCE 41 and may be used as a further investigation of buildings where the deficiency-based evaluation procedures have been used.

Immediate Occupancy Structural Performance Level (S-1) - Immediate Occupancy, means the post-earthquake damage state in which only very limited structural damage has occurred. The basic vertical- and lateral-force resisting systems of the building retain almost all of their pre-earthquake strength and stiffness. The risk of life-threatening injury as a result of structural damage is very low, and although some minor structural repairs might be appropriate, these repairs would generally not be required before re-occupancy. Continued use of the building is not limited by its structural condition but might be limited by damage or disruption to nonstructural elements of the building, furnishings, or equipment and availability of external utility services.

Damage Control Structural Performance Level (S-2) - The Damage Control Structural Performance Level is set forth as a midway point between Life Safety and Immediate Occupancy. It is intended to provide a structure with a greater reliability of resisting collapse and being less damaged than a typical structure, but not to the extent required of a structure designed to meet the Immediate Occupancy Performance Level.

Life Safety Structural Performance Level (S-3) - Structural Performance Level S-3, Life Safety, means the post-earthquake damage state in which significant damage to the structure has occurred but some margin against either partial or total structural collapse remains. Some structural elements and components are severely damaged, but this damage has not resulted in large falling debris hazards, either inside or outside the building. Injuries might occur during the earthquake; however, the overall risk of life-threatening injury as a result of structural damage is expected to be low. It should be possible to repair the structure; however, for economic reasons, this repair might not be practical. Although the

damaged structure is not an imminent collapse risk, it would be prudent to implement structural repairs or install temporary bracing before re-occupancy.

Limited Safety Structural Performance Level (S-4) - The Limited Safety Structural Performance Level is set forth as a midway point between Life Safety and Collapse Prevention. It is intended to provide a structure with a greater reliability of resisting collapse than a structure that only meets the Collapse Prevention Performance Level, but not to the full level of safety that the Life Safety Performance Level would imply.

Collapse Prevention Structural Performance Level (S-5) - Structural Performance Level S-5, Collapse Prevention, means the post-earthquake damage state in which the building is on the verge of partial or total collapse. Substantial damage to the structure has occurred, potentially including significant degradation in the stiffness and strength of the lateral-force-resisting system, large permanent lateral deformation of the structure, and—to a more limited extent—degradation in vertical-load-carrying capacity. However, all significant components of the gravity-load-resisting system must continue to carry their gravity loads. Significant risk of injury caused by falling hazards from structural debris might exist. The structure might not be technically practical to repair and is not safe for re-occupancy because aftershock activity could induce collapse.

Structural Performance Not Considered (S-6) - Where an evaluation or retrofit does not address the structure.

Operational Nonstructural Performance Level (N-A) - Nonstructural Performance Level N-A, Operational, is the post-earthquake damage state in which the nonstructural components are able to provide the functions they provided in the building before the earthquake.

Positional Retention Nonstructural Performance level (N-B) - Nonstructural Performance Level N-B, Position Retention, is the post-earthquake damage state in which nonstructural components might be damaged to the extent that they cannot immediately function but are secured in place so that damage caused by falling, toppling, or breaking of utility connections is avoided.

Life Safety Nonstructural Performance Level (N-C) - Nonstructural Performance Level N-C, Life Safety, is the post-earthquake damage state in which nonstructural components may be damaged, but the consequential damage does not pose a life-safety threat.

Hazards Reduced Nonstructural Performance Level (N-D) – Nonstructural Performance Level N-D, Hazards Reduced, shall be defined as the postearthquake damage state in which nonstructural components are damaged and could potentially create falling hazards, but high-hazard nonstructural components identified in Chapter 13, Table 13-1, are secured to prevent falling into areas of public assembly or those falling hazards from those components could pose a risk to life safety for many people.

Nonstructural Performance Not Considered (N-E) - Where an evaluation or retrofit does not address all nonstructural components to one of the levels in the previous sections.

APPENDIX B: SITE PLAN

GERVAIS HIGH SCHOOL

300 Douglas Ave NE
Gervais, OR 97026

SEISMIC EVALUATION REPORT

Prepared By:
tk1sc
616 1st Avenue, Suite 500
Seattle, WA 98104

Report Date: March 27, 2020
Project Number: 2020-0057

Prepared For:
Gervais School District
290 1st Street
Gervais, OR 97026

Table of Contents

INTRODUCTION 2
APPLICABLE CODES AND STANDARDS 2
SITE OBSERVATIONS 2
BUILDING DESCRIPTION 2
GRAVITY LOAD RESISTING SYSTEMS 3
LATERAL FORCE RESISTING SYSTEM 3
EXISTING FOUNDATION SYSTEM 4
PREVIOUS RETROFIT WORK 4
SEISMIC EVALUATION PERFORMANCE OBJECTIVES 4
BUILDING INFORMATION AND EVALUATION CRITERIA 5
SEISMIC EVALULATION METHODOLOGY 5
ITEMS THAT MAY REQUIRE FUTHER INVESTIGATION 5
- Basic Checklist 6
- Collapse Prevention Structural Checklist for Building Types W2: Wood Frames, Commercial and Industrial 6
- Collapse Prevention Structural Checklist for Building Types PC1: Tilt-Up Concrete Shear Walls with Flexible Diaphragms 6
- Nonstructural Checklist 7

RECOMMENDATIONS 7
APPENDIX A: SCHEMATIC UPGRADE SKETCHES 9
APPENDIX B: GLOSSARY OF TERMS 10
APPENDIX C: SITE PLAN 12
APPENDIX D: TIER 1 SCREENING CHECKLISTS 13
APPENDIX E: QUICK CHECK HAND CALCULATIONS 27
APPENDIX F: COST ESTIMATE 31

INTRODUCTION

tk1sc has performed a seismic assessment of Gervais High School in Gervais, Oregon, based on the Tier 1 screening procedure per ASCE 41-17. The building being evaluated is located at 300 Douglas Ave NE, Gervais, OR 97026.

Using the ASCE 41-17 standard, structural components were evaluated to the "Limited Safety" performance level and non-structural components were evaluated to the "Hazards Reduced" performance level to identify potential deficiencies and provide recommendations for further investigation as well as possible upgrade solutions to mitigate these deficiencies.

APPLICABLE CODES AND STANDARDS

Below is a list of governing building codes (original and current), as well as the applicable seismic evaluation and retrofit standard:

CODES AND STANDARDS	
Original Governing Building Code:	Original structure – Estimated 1961 UBC 1967 Addition – Estimated 1964 UBC
Current Governing Building Code:	2014 Oregon Structural Specialty Code
Seismic Eval/Retrofit Referenced Standard:	American Society of Civil Engineers, "Seismic Evaluation and Retrofit of Existing Buildings" (ASCE 41-17)

SITE OBSERVATIONS

A site observation was performed by Jason Tornquist, PE, SE, and Ryan Kellberg, PE on February 24th, 2020, in order to assess the overall condition of the facility, as well as to verify general conformance of the existing conditions with the available structural drawings. The drawings to be used for the seismic assessment of the facility consist of:

- Original Building: Gervais High School Record Drawings, prepared by Hewlett & Jamison Architects and dated 10/8/1962
- 1967 Addition: Gervais Union High School Addition, prepared by Benjamin E. Cave, and dated 6/12/1967

No demolition or invasive investigation was performed as part of this site visit, and as such, the investigation was limited to exposed structural elements visible from readily accessible spaces, as well as spaces above lay-in ceiling tile.

BUILDING DESCRIPTION

The facility located 300 Douglas Ave NE, Gervais, OR 97026 is comprised of one primary building that was originally constructed in 1962, and later added onto in 1967. Altogether, the facility is a (primarily) one-story building with a floor area of approximately 65,000 ft^2. There are also several other smaller buildings on site (including a shop building and various other smaller storage/maintenance buildings) however, this report is focused primarily on the main school building.

Figure 1 - Site Orientation Plan

GRAVITY LOAD RESISTING SYSTEMS

The gravity load resisting system for much of the building consists of plywood roof sheathing over solid sawn roof beams, supported by wood columns, wood stud walls, and a few concrete bearing walls. In the gymnasium area, the roof is constructed with tectum roof deck over steel roof trusses, supported by concrete walls and steel columns. There is also a small area at the janitor's closet with metal roof/floor deck and steel joists.

Based on visible evidence, the upper gym mezzanine area appears to consist of a concrete slab (either solid concrete or topped hollowcore precast planks) supported by concrete and/or CMU bearing walls.

LATERAL FORCE RESISTING SYSTEM

The lateral force resisting system is largely comprised of unblocked plywood sheathed diaphragms over solid sawn members, transferring force to plywood sheathed wood stud walls and concrete walls. At the gymnasium, there is a tectum roof deck system over steel trusses with diagonal diaphragm struts to transfer forces to supporting concrete shear walls. There is also an upper gymnasium mezzanine built with an elevated concrete floor which is supported on all sides by concrete shear walls.

The lateral force resisting system of the original portion of the building and the 1967 addition can be classified per ASCE 41-17 as a combination of a W2 system and a PC1 system.

A W2 system is defined as follows:

> *"These buildings are commercial or industrial buildings with a floor area of 5,000 ft^2 or more. There are few, if any, interior walls. The floor and roof framing consists of wood or steel trusses, glulam or steel beams, and wood posts or steel columns. The foundation system is permitted to consist of a variety of elements. Seismic forces are resisted by flexible diaphragms and exterior walls sheathed with plywood, oriented strand board, stucco, plaster, or straight or diagonal wood sheathing, or they are permitted to be braced with various forms of bracing. Wall openings for storefronts and garages, where present, are framed by post-and-beam framing."*

A PC1 system is defined as follows:

> *"These buildings have precast concrete perimeter wall panels and often, interior walls, that are typically cast on site and tilted into place. The panels are interconnected by weldments, cast-in-place concrete pilasters, or collector elements. Floor and roof framing consists of wood joists, glulam beams, steel beams, or open web joists. Framing is supported on interior steel or wood columns and*

perimeter concrete bearing walls. The floors and roof consist of wood sheathing or untopped metal deck. Seismic forces are resisted by the precast concrete perimeter wall panels. Wall panels are permitted to be solid or have large window and door openings that cause the panels to behave more as frames than as shear walls. In older construction, wood framing is attached to the walls with wood ledgers. The roof framing is permitted to have tension-capable connections between elements. The foundation system is permitted to consist of a variety of elements."

EXISTING FOUNDATION SYSTEM

The original portion of the building does not have available structural as-built drawings of the foundations, however, based on available information and the type of construction, it is likely that this facility is supported by a shallow foundation system of concrete stem walls over continuous wall footings and isolated spread footings at columns. Concrete slab on grade exists throughout the building.

The 1967 addition to the building is supported by a shallow foundation system of 6" concrete stem walls over 18" continuous wall footings and 33" square isolated spread footings at columns. There is also a 4" thick concrete slab on grade.

PREVIOUS RETROFIT WORK

There is no record of previous retrofit work on any of the buildings at this facility. Additionally, there was no evidence observed during the site visit to suggest that retrofit work has previously been performed.

SEISMIC EVALUATION PERFORMANCE OBJECTIVES

The seismic evaluation of the Gervais High School facility was performed using *ASCE 41-17: Seismic Evaluation and Retrofit of Existing Buildings*. This standard defines various ground acceleration levels to be used in the investigation, depending on whether the evaluation/retrofit process is to be carried out to the equivalent standard of a new building (BSE-1N and BSE-2N), or to a reduced level (BSE-1E and BSE-2E). The reduced level of performance is based on the assumption that an existing building will have a shorter life span than that of a new building.

The Oregon Department of Education requires that the schools be evaluated as Risk Category III structures with the ability to perform to the Limited Safety Structural Performance Level (S-4) at the BSE-2E hazard level. This hazard level has a probability of exceedance of 5% over 50 years, or a 975-year return period. The basic performance objective for existing buildings for Limited Safety requires the use of the Collapse Prevention check lists, while the acceptance criteria for Tier 1 calculation-based quick checks be the average of Life Safety and Collapse Prevention.

The Oregon Department of Education Rule that outlines the requirements for the School Construction Matching Program does not explicitly provide requirements for the performance objectives to be used for non-structural performance. For this assessment, non-structural performance was reviewed against the "Hazards Reduced" (N-D) performance level, as this is consistent with the 41-17 requirements for Risk Category III buildings and the BSE-2E basic performance objective. See the glossary of terms for a full description of these performance levels.

BUILDING INFORMATION AND EVALUATION CRITERIA

The following is a summary of parameters used for the seismic evaluation of the building per ASCE 41-17:

BUILDING INFORMATION	
Site Latitude and Longitude:	45.104608, -122.896144
Year Built:	1962 with a 1967 addition
Number of Stories:	1
Structural Performance Level:	Limited Safety (S-4)
Nonstructural Performance Level:	Hazards Reduced (N-D)
Design Spectral Response Acceleration Parameters:	S_{XS} = 0.778g (BSE-2E, 975-year return period) S_{X1} = 0.570g (BSE-2E, 975-year return period) S_a = 0.778g
Level of Seismicity:	High
Structure Type:	W2 and PC1
Benchmark Building:	No

SEISMIC EVALULATION METHODOLOGY

An ASCE 41-17 Tier 1 assessment was performed to identify potential deficiencies of the existing structure and non-structural systems. The Tier 1 procedure utilizes a checklist of items to be evaluated and various quick check calculation methods to verify the adequacy of the lateral force resisting system's load path and to identify potential seismic vulnerabilities within the structure. Checklists include a basic checklist for the overall building, a checklist for each of the primary lateral force resisting systems, and a checklist for nonstructural components and systems. Each item is marked as "Compliant", Noncompliant", "Not Applicable", or "Unknown" based on the information available. For all items marked as either "Noncompliant" or "Unknown", further investigation may be required to either verify compliance or identify the need for retrofit measures.

ITEMS THAT MAY REQUIRE FUTHER INVESTIGATION

The lists below are a summary of checklist items that were marked as either "non-compliant" or "unknown". See Appendix C for full checklist results. Please note that not all items marked as NC or U below will require remediation. See the "Recommendations" section of this report for further information.

Key: NC = Noncompliant, U = Unknown

Basic Checklist

DESCRIPTION	STATUS	COMMENT
LIQUEFACTION	U	No geotechnical investigation was performed as part of this study, therefore the existence of soils susceptible to liquefaction within 50 ft of the foundation cannot be verified.
SURFACE FAULT RUPTURE	U	No geotechnical investigation was performed as part of this study, therefore surface fault rupture and surface displacement is unknown.
TIES BETWEEN FOUNDATION ELEMENTS	U	Without as-built structural drawings, foundation ties cannot be verified unless more invasive investigation techniques are used.

Collapse Prevention Structural Checklist for Building Types W2: Wood Frames, Commercial and Industrial

DESCRIPTION	STATUS	COMMENT
SHEAR STRESS CHECK:	NC	Some walls are sheathed with gypsum board which is insufficient to resist the required seismic load. With plywood sheathing these walls would likely be compliant, depending on sheathing extents, type, and nailing.
WOOD SILLS:	U	Unable to verify whether wood sills are bolted to the foundation.
WOOD SILL BOLTS:	U	Unable to verify whether wood sills are bolted to the foundation.
ROOF CHORD CONTINUITY:	U	Unable to verify continuity of roof chords.
DIAGONALLY SHEATHED AND UNBLOCKED DIAPHRAGMS:	NC	Unblocked diaphragms exist with spans greater than 40’.

Collapse Prevention Structural Checklist for Building Types PC1: Tilt-Up Concrete Shear Walls with Flexible Diaphragms

DESCRIPTION	STATUS	COMMENT
WALL ANCHORAGE	U	Out of plane wall anchorage cannot be verified without existing structural drawings or x-ray investigation.
REINFORCING STEEL:	U	Without structural as-built drawings or x-ray investigation, existing reinforcing steel cannot be verified.
WALL THICKNESS:	NC	6” thick walls have a height limit of 20’. Gym walls are taller than 20’.
WOOD LEDGERS:	NC / U	Wood ledger connections exist, however, it is unclear whether the connection induces cross grain bending. Limited visual evidence in key areas suggests non-compliant connection.
TRANSFER TO SHEAR WALLS:	NC / U	Unable to see diaphragm connections to shear walls. Without as-built structural drawings or more invasive investigation, this cannot be verified. Limited visual evidence in key areas suggests non-compliant connection.

OTHER DIAPHRAGMS	NC	At the gymnasium, the roof diaphragm is a Tectum roof system.
MINIMUM NUMBER OR WALL ANCHORS PER PANEL:	U	Wall anchors cannot be verified without existing structural drawings.
PRECAST WALL PANELS:	U	Precast wall panel connections to foundation cannot be verified without existing structural drawings.
UPLIFT AT PILE CAPS:	U	Pile cap reinforcing cannot be verified without existing structural drawings, however, it is unlikely that pile caps exist at this facility.
GIRDERS:	U	Ties securing anchor bolts cannot be verified without existing structural drawings or x-ray investigation.

Nonstructural Checklist

HAZARDOUS MATERIALS		
DESCRIPTION	**STATUS**	**COMMENT**
HAZARDOUS MATERIAL EQUIPMENT:	U	Unknown whether equipment mounted on vibration isolators and containing hazardous materials are equipped with restraints or snubbers. (Refers to natural gas equipment / appliances and may not present an issue).
HAZARDOUS MATERIAL STORAGE:	U	Unknown whether breakable containers that hold hazardous materials are restrained. (Unlikely to present an issue).
HAZARDOUS MATERIAL DISTRIBUTION:	U	Unknown which pipes are conveying hazardous material to verify whether bracing is present. (Refers to natural gas piping and may not present a serious issue).
SHUTOFF VALVES:	U	Unknown which pipes are conveying hazardous material to verify whether shutoff valves are present. (Refers to natural gas piping and may not present a serious issue).
FLEXIBLE COUPLINGS:	NC	There do not appear to be flexible couplings at ductwork or piping.

RECOMMENDATIONS

Based on the deficiencies identified above, tk1sc recommends addressing the items listed below. Items are listed in order of decreasing importance, with the most important items listed first.

- **Shear stress in Shear Walls:** Many of the light-framed shear walls in the building appear to be sheathed with gypsum board which is insufficient to resist the required seismic loads. It is recommended to verify sheathing type, and walls that are found to be sheathed with only gypsum wallboard be re-sheathed with structural rated plywood panels. See Figure 2 for approximate extents of walls to be verified and potentially re-sheathed.
- **Transfer to Shear Walls:** Due to hard lid ceilings throughout the facility, diaphragm connections to shear walls was unable to be verified. It is important that shear forces are able to transfer from the roof diaphragm into the shear walls, therefore, these connections should be investigated, and if found to be deficient, should be improved by the addition of clip angles or plated connectors between wall top plates and blocking/roof framing members.

- **Wood Sill Bolts:** Due to the lack of available structural drawings and non-invasive investigation, wall connections to foundations could not be verified during the site investigation. The existing connections should be verified and if found to be deficient, should be improved with the addition of post installed anchors into the foundation below.
- **Other Diaphragms:** In the gymnasium, the roof system is constructed of a tectum system. This system does not inherently have adequate capacity to resist seismic loads and relies on diagonal braces to transfer loads to supporting shear walls. The single X-brace that currently exists will not provide enough capacity by itself, therefore, additional angles will need to be installed in order to achieve adequate strength. Angles will need to be anchored to the top of concrete walls and welded to all steel roof trusses.
- **Diaphragm Improvements:** The building has a roof diaphragm comprised of unblocked plywood sheathing. In areas where roof diaphragms span greater than 40 ft between shear walls, blocking should be installed at panel edges to provide sufficient capacity for a distance of about ¼ of the span between shear walls. See Figure 2 for approximate extents of work.
- **Wood Ledgers:** Throughout the facility, wood ledger connections exist at concrete tilt-up walls that will induce cross-grain bending, which may compromise support of gravity elements during a seismic event. It is recommended that these connections be upgraded to provide a more resilient connection and eliminate cross-grain bending in the ledgers.
- **Liquefaction:** A geotechnical investigation should be conducted to verify whether there are soils susceptible to liquefaction within a depth of 50 ft of the building. Required remediation will depend on the results of this investigation.
- **Shut off Valves and Flexible Couplings:** Flexible couplings and shut off valves should be installed at all components containing hazardous materials where they are identified to be lacking throughout the structure.

APPENDIX A: SCHEMATIC UPGRADE SKETCHES

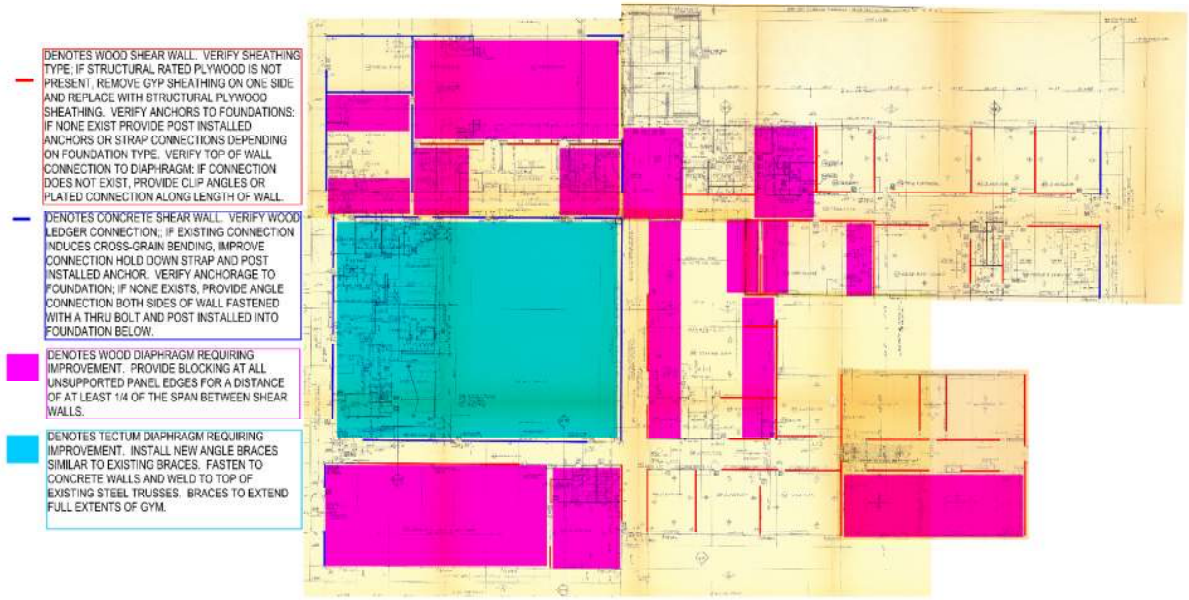

Figure 2-Shear Wall and Diaphragm Improvement Plan

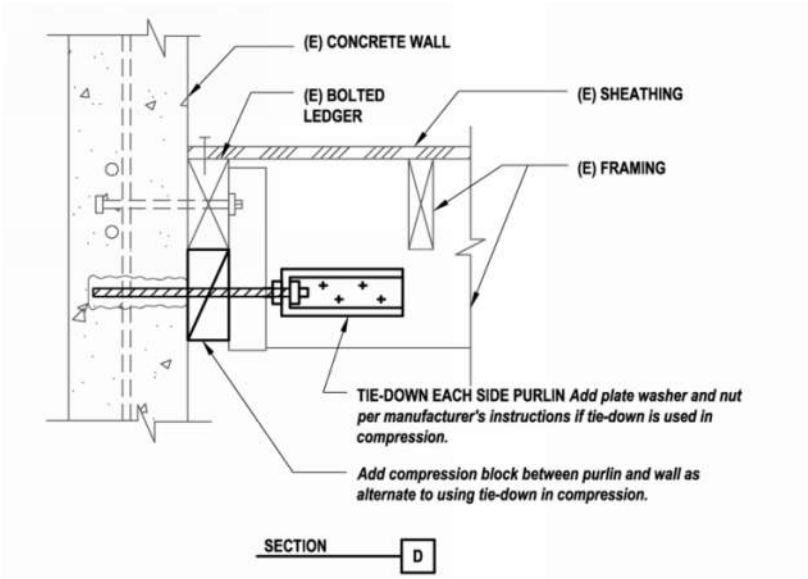

Figure 16.4.1-1D: Wall Out-of-Plane Anchorage

Figure 3-Ledger Connection at Concrete Wall

APPENDIX B: GLOSSARY OF TERMS

Tier 1 Screening - The purpose of the Tier 1 screening phase of the evaluation process is to quickly identify buildings that comply with the provisions of this standard. A Tier 1 screening also familiarizes the design professional with the building, its potential deficiencies, and its potential behavior. A Tier 1 screening is required for all buildings so that potential deficiencies may be quickly identified. Further evaluation using a Tier 2 or Tier 3 evaluation then focuses, at a minimum, on the potential deficiencies identified in Tier 1.

Tier 2 Deficiency-Based Evaluation - The Tier 2 deficiency-based evaluation requires additional analysis and evaluation of all the potential deficiencies identified in the Tier 1 screening (denoted by either "Noncompliant" or "Unknown" responses in the Tier 1 checklists). The additional analysis and evaluation of each potential deficiency shall be sufficient to either confirm the deficiency or demonstrate the adequacy of the structure as it relates to the potential deficiency. The scope of the Tier 2 deficiency-based evaluation need not expand beyond the evaluation of the potential deficiencies identified in the Tier 1 screening.

Tier 3 Systematic Procedure - The Tier 3 systematic procedure involves an analysis of the entire building, either in its current condition or with proposed retrofit measures. These procedures shall be used where systematic procedures are required in accordance with ASCE 41 and may be used as a further investigation of buildings where the deficiency-based evaluation procedures have been used.

Immediate Occupancy Structural Performance Level (S-1) - Immediate Occupancy, means the post-earthquake damage state in which only very limited structural damage has occurred. The basic vertical- and lateral-force resisting systems of the building retain almost all of their pre-earthquake strength and stiffness. The risk of life-threatening injury as a result of structural damage is very low, and although some minor structural repairs might be appropriate, these repairs would generally not be required before re-occupancy. Continued use of the building is not limited by its structural condition but might be limited by damage or disruption to nonstructural elements of the building, furnishings, or equipment and availability of external utility services.

Damage Control Structural Performance Level (S-2) - The Damage Control Structural Performance Level is set forth as a midway point between Life Safety and Immediate Occupancy. It is intended to provide a structure with a greater reliability of resisting collapse and being less damaged than a typical structure, but not to the extent required of a structure designed to meet the Immediate Occupancy Performance Level.

Life Safety Structural Performance Level (S-3) - Structural Performance Level S-3, Life Safety, means the post-earthquake damage state in which significant damage to the structure has occurred but some margin against either partial or total structural collapse remains. Some structural elements and components are severely damaged, but this damage has not resulted in large falling debris hazards, either inside or outside the building. Injuries might occur during the earthquake; however, the overall risk of life-threatening injury as a result of structural damage is expected to be low. It should be possible to repair the structure; however, for economic reasons, this repair might not be practical. Although the damaged structure is not an imminent collapse risk, it would be prudent to implement structural repairs or install temporary bracing before re-occupancy.

Limited Safety Structural Performance Level (S-4) - The Limited Safety Structural Performance Level is set forth as a midway point between Life Safety and Collapse Prevention. It is intended to provide a structure with a greater reliability of resisting collapse than a structure that only meets the Collapse Prevention Performance Level, but not to the full level of safety that the Life Safety Performance Level would imply.

Collapse Prevention Structural Performance Level (S-5) - Structural Performance Level S-5, Collapse Prevention, means the post-earthquake damage state in which the building is on the verge of partial or total collapse. Substantial damage to the structure has occurred, potentially including significant degradation in the stiffness and strength of the lateral-force-resisting system, large permanent lateral deformation of the structure, and—to a more limited extent—degradation in vertical-load-carrying capacity. However, all significant components of the gravity-load-resisting system must continue to carry their gravity loads. Significant risk of injury caused by falling hazards from structural debris might exist. The structure might not be technically practical to repair and is not safe for re-occupancy because aftershock activity could induce collapse.

Structural Performance Not Considered (S-6) - Where an evaluation or retrofit does not address the structure.

Operational Nonstructural Performance Level (N-A) - Nonstructural Performance Level N-A, Operational, is the post-earthquake damage state in which the nonstructural components are able to provide the functions they provided in the building before the earthquake.

Positional Retention Nonstructural Performance level (N-B) - Nonstructural Performance Level N-B, Position Retention, is the post-earthquake damage state in which nonstructural components might be damaged to the extent that they cannot immediately function but are secured in place so that damage caused by falling, toppling, or breaking of utility connections is avoided.

Life Safety Nonstructural Performance Level (N-C) - Nonstructural Performance Level N-C, Life Safety, is the post-earthquake damage state in which nonstructural components may be damaged, but the consequential damage does not pose a life-safety threat.

Hazards Reduced Nonstructural Performance Level (N-D) – Nonstructural Performance Level N-D, Hazards Reduced, shall be defined as the postearthquake damage state in which nonstructural components are damaged and could potentially create falling hazards, but high-hazard nonstructural components identified in Chapter 13, Table 13-1, are secured to prevent falling into areas of public assembly or those falling hazards from those components could pose a risk to life safety for many people.

Nonstructural Performance Not Considered (N-E) - Where an evaluation or retrofit does not address all nonstructural components to one of the levels in the previous sections.

APPENDIX C: SITE PLAN

APPENDIX D: TIER 1 SCREENING CHECKLISTS

Table 17-2. Collapse Prevention Basic Configuration Checklist

Status	Evaluation Statement	Tier 2 Reference	Commentary Reference
Low Seismicity			
Building System—General			
C NC N/A U	LOAD PATH: The structure contains a complete, well-defined load path, including structural elements and connections, that serves to transfer the inertial forces associated with the mass of all elements of the building to the foundation.	5.4.1.1	A.2.1.1
C NC N/A U	ADJACENT BUILDINGS: The clear distance between the building being evaluated and any adjacent building is greater than 0.25% of the height of the shorter building in low seismicity, 0.5% in moderate seismicity, and 1.5% in high seismicity.	5.4.1.2	A.2.1.2
C NC N/A U	MEZZANINES: Interior mezzanine levels are braced independently from the main structure or are anchored to the seismic-force-resisting elements of the main structure.	5.4.1.3	A.2.1.3
Building System—Building Configuration			
C NC N/A U	WEAK STORY: The sum of the shear strengths of the seismic-force-resisting system in any story in each direction is not less than 80% of the strength in the adjacent story above.	5.4.2.1	A.2.2.2
C NC N/A U	SOFT STORY: The stiffness of the seismic-force-resisting system in any story is not less than 70% of the seismic-force-resisting system stiffness in an adjacent story above or less than 80% of the average seismic-force-resisting system stiffness of the three stories above.	5.4.2.2	A.2.2.3
C NC N/A U	VERTICAL IRREGULARITIES: All vertical elements in the seismic-force-resisting system are continuous to the foundation.	5.4.2.3	A.2.2.4
C NC N/A U	GEOMETRY: There are no changes in the net horizontal dimension of the seismic-force-resisting system of more than 30% in a story relative to adjacent stories, excluding one-story penthouses and mezzanines.	5.4.2.4	A.2.2.5
C NC N/A U	MASS: There is no change in effective mass of more than 50% from one story to the next. Light roofs, penthouses, and mezzanines need not be considered.	5.4.2.5	A.2.2.6
C NC N/A U	TORSION: The estimated distance between the story center of mass and the story center of rigidity is less than 20% of the building width in either plan dimension.	5.4.2.6	A.2.2.7

continues

Table 17-2 *(Continued)*. Collapse Prevention Basic Configuration Checklist

Status	Evaluation Statement	Tier 2 Reference	Commentary Reference
Moderate Seismicity (Complete the Following Items in Addition to the Items for Low Seismicity)			
Geologic Site Hazards			
C NC N/A U	LIQUEFACTION: Liquefaction-susceptible, saturated, loose granular soils that could jeopardize the building's seismic performance do not exist in the foundation soils at depths within 50 ft (15.2 m) under the building.	5.4.3.1	A.6.1.1
C NC N/A U	SLOPE FAILURE: The building site is located away from potential earthquake-induced slope failures or rockfalls so that it is unaffected by such failures or is capable of accommodating any predicted movements without failure.	5.4.3.1	A.6.1.2
C NC N/A U	SURFACE FAULT RUPTURE: Surface fault rupture and surface displacement at the building site are not anticipated.	5.4.3.1	A.6.1.3
High Seismicity (Complete the Following Items in Addition to the Items for Moderate Seismicity)			
Foundation Configuration			
C NC N/A U	OVERTURNING: The ratio of the least horizontal dimension of the seismic-force-resisting system at the foundation level to the building height (base/height) is greater than $0.6S_a$.	5.4.3.3	A.6.2.1
C NC N/A U	TIES BETWEEN FOUNDATION ELEMENTS: The foundation has ties adequate to resist seismic forces where footings, piles, and piers are not restrained by beams, slabs, or soils classified as Site Class A, B, or C.	5.4.3.4	A.6.2.2

Note: C = Compliant, NC = Noncompliant, N/A = Not Applicable, and U = Unknown.

Table 17-6. Collapse Prevention Structural Checklist for Building Type W2

Status	Evaluation Statement	Tier 2 Reference	Commentary Reference
Low and Moderate Seismicity			
Seismic-Force-Resisting System			
C NC N/A U	REDUNDANCY: The number of lines of shear walls in each principal direction is greater than or equal to 2.	5.5.1.1	A.3.2.1.1
C NC N/A U	SHEAR STRESS CHECK: The shear stress in the shear walls, calculated using the Quick Check procedure of Section 4.4.3.3, is less than the following values: Structural panel sheathing 1,000 lb/ft Diagonal sheathing 700 lb/ft Straight sheathing 100 lb/ft All other conditions 100 lb/ft	5.5.3.1.1	A.3.2.7.1
C NC N/A U	STUCCO (EXTERIOR PLASTER) SHEAR WALLS: Multi-story buildings do not rely on exterior stucco walls as the primary seismic-force-resisting system.	5.5.3.6.1	A.3.2.7.2
C NC N/A U	GYPSUM WALLBOARD OR PLASTER SHEAR WALLS: Interior plaster or gypsum wallboard is not used for shear walls on buildings more than one story high with the exception of the uppermost level of a multi-story building.	5.5.3.6.1	A.3.2.7.3
C NC N/A U	NARROW WOOD SHEAR WALLS: Narrow wood shear walls with an aspect ratio greater than 2-to-1 are not used to resist seismic forces.	5.5.3.6.1	A.3.2.7.4
C NC N/A U	WALLS CONNECTED THROUGH FLOORS: Shear walls have an interconnection between stories to transfer overturning and shear forces through the floor.	5.5.3.6.2	A.3.2.7.5
C NC N/A U	HILLSIDE SITE: For structures that are taller on at least one side by more than one-half story because of a sloping site, all shear walls on the downhill slope have an aspect ratio less than 1-to-1.	5.5.3.6.3	A.3.2.7.6
C NC N/A U	CRIPPLE WALLS: Cripple walls below first-floor-level shear walls are braced to the foundation with wood structural panels.	5.5.3.6.4	A.3.2.7.7
C NC N/A U	OPENINGS: Walls with openings greater than 80% of the length are braced with wood structural panel shear walls with aspect ratios of not more than 1.5-to-1 or are supported by adjacent construction through positive ties capable of transferring the seismic forces.	5.5.3.6.5	A.3.2.7.8
Connections			
C NC N/A U	WOOD POSTS: There is a positive connection of wood posts to the foundation.	5.7.3.3	A.5.3.3
C NC N/A U	WOOD SILLS: All wood sills are bolted to the foundation.	5.7.3.3	A.5.3.4
C NC N/A U	GIRDER–COLUMN CONNECTION: There is a positive connection using plates, connection hardware, or straps between the girder and the column support.	5.7.4.1	A.5.4.1
High Seismicity (Complete the Following Items in Addition to the Items for Low and Moderate Seismicity)			
Connections			
C NC N/A U	WOOD SILL BOLTS: Sill bolts are spaced at 6 ft (1.8 m) or less with acceptable edge and end distance provided for wood and concrete.	5.7.3.3	A.5.3.7
Diaphragms			
C NC N/A U	DIAPHRAGM CONTINUITY: The diaphragms are not composed of split-level floors and do not have expansion joints.	5.6.1.1	A.4.1.1
C NC N/A U	ROOF CHORD CONTINUITY: All chord elements are continuous, regardless of changes in roof elevation.	5.6.1.1	A.4.1.3
C NC N/A U	DIAPHRAGM REINFORCEMENT AT OPENINGS: There is reinforcing around all diaphragm openings larger than 50% of the building width in either major plan dimension.	5.6.1.5	A.4.1.8
C NC N/A U	STRAIGHT SHEATHING: All straight-sheathed diaphragms have aspect ratios less than 2-to-1 in the direction being considered.	5.6.2	A.4.2.1
C NC N/A U	SPANS: All wood diaphragms with spans greater than 24 ft (7.3 m) consist of wood structural panels or diagonal sheathing.	5.6.2	A.4.2.2

continues

Table 17-6 *(Continued)*. **Collapse Prevention Structural Checklist for Building Type W2**

Status	Evaluation Statement	Tier 2 Reference	Commentary Reference
C NC N/A U	DIAGONALLY SHEATHED AND UNBLOCKED DIAPHRAGMS: All diagonally sheathed or unblocked wood structural panel diaphragms have horizontal spans less than 40 ft (12.2 m) and have aspect ratios less than or equal to 4-to-1.	5.6.2	A.4.2.3
C NC N/A U	OTHER DIAPHRAGMS: The diaphragms do not consist of a system other than wood, metal deck, concrete, or horizontal bracing.	5.6.5	A.4.7.1

Note: C = Compliant, NC = Noncompliant, N/A = Not Applicable, and U = Unknown.

Table 17-28. Collapse Prevention Structural Checklist for Building Types PC1 and PC1a

Status	Evaluation Statement	Tier 2 Reference	Commentary Reference
Low Seismicity Connections			
C NC N/A U	WALL ANCHORAGE: Exterior concrete or masonry walls that are dependent on the diaphragm for lateral support are anchored for out-of-plane forces at each diaphragm level with steel anchors, reinforcing dowels, or straps that are developed into the diaphragm. Connections have strength to resist the connection force calculated in the Quick Check procedure of Section 4.4.3.7.	5.7.1.1	A.5.1.1

continues

Table 17-28 *(Continued)*. **Collapse Prevention Structural Checklist for Building Types PC1 and PC1a**

Status	Evaluation Statement	Tier 2 Reference	Commentary Reference
Moderate Seismicity (Complete the Following Items in Addition to the Items for Low Seismicity)			
Seismic-Force-Resisting System			
C NC N/A U	REDUNDANCY: The number of lines of shear walls in each principal direction is greater than or equal to 2.	5.5.1.1	A.3.2.1.1
C NC N/A U	WALL SHEAR STRESS CHECK: The shear stress in the precast panels, calculated using the Quick Check procedure of Section 4.4.3.3, is less than the greater of 100 lb/in.^{2} (0.69 MPa) or $2\sqrt{f'_c}$.	5.5.3.1.1	A.3.2.3.1
C NC N/A U	REINFORCING STEEL: The ratio of reinforcing steel area to gross concrete area is not less than 0.0012 in the vertical direction and 0.0020 in the horizontal direction.	5.5.3.1.3	A.3.2.3.2
C NC N/A U	WALL THICKNESS: Thicknesses of bearing walls are not less than 1/40 the unsupported height or length, whichever is shorter, nor less than 4 in. (101 mm).	5.5.3.1.2	A.3.2.3.5
Diaphragms			
C NC N/A U	TOPPING SLAB: Precast concrete diaphragm elements are interconnected by a continuous reinforced concrete topping slab with a minimum thickness of 2 in. (51 mm).	5.6.4	A.4.5.1
Connections			
C NC N/A U	WOOD LEDGERS: The connection between the wall panels and the diaphragm does not induce cross-grain bending or tension in the wood ledgers.	5.7.1.3	A.5.1.2
C NC N/A U	TRANSFER TO SHEAR WALLS: Diaphragms are connected for transfer of seismic forces to the shear walls.	5.7.2	A.5.2.1
C NC N/A U	TOPPING SLAB TO WALLS OR FRAMES: Reinforced concrete topping slabs that interconnect the precast concrete diaphragm elements are doweled for transfer of forces into the shear wall or frame elements.	5.7.2	A.5.2.3
C NC N/A U	GIRDER–COLUMN CONNECTION: There is a positive connection using plates, connection hardware, or straps between the girder and the column support.	5.7.4.1	A.5.4.1
High Seismicity (Complete the Following Items in Addition to the Items for Low and Moderate Seismicity)			
Seismic-Force-Resisting System			
C NC N/A U	DEFLECTION COMPATIBILITY FOR RIGID DIAPHRAGMS: Secondary components have the shear capacity to develop the flexural strength of the components.	5.5.2.5.2	A.3.1.6.2
C NC N/A U	WALL OPENINGS: The total width of openings along any perimeter wall line constitutes less than 75% of the length of any perimeter wall when the wall piers have aspect ratios of less than 2-to-1.	5.5.3.3.1	A.3.2.3.3
Diaphragms			
C NC N/A U	CROSS TIES IN FLEXIBLE DIAPHRAGMS: There are continuous cross ties between diaphragm chords.	5.6.1.2	A.4.1.2
C NC N/A U	STRAIGHT SHEATHING: All straight-sheathed diaphragms have aspect ratios less than 2-to-1 in the direction being considered.	5.6.2	A.4.2.1
C NC N/A U	SPANS: All wood diaphragms with spans greater than 24 ft (7.3 m) consist of wood structural panels or diagonal sheathing.	5.6.2	A.4.2.2
C NC N/A U	DIAGONALLY SHEATHED AND UNBLOCKED DIAPHRAGMS: All diagonally sheathed or unblocked wood structural panel diaphragms have horizontal spans less than 40 ft (12.2 m) and aspect ratios less than or equal to 4-to-1.	5.6.2	A.4.2.3
C NC N/A U	OTHER DIAPHRAGMS: Diaphragms do not consist of a system other than wood, metal deck, concrete, or horizontal bracing.	5.6.5	A.4.7.1
Connections			
C NC N/A U	MINIMUM NUMBER OF WALL ANCHORS PER PANEL: There are at least two anchors connecting each precast wall panel to the diaphragm elements.	5.7.1.4	A.5.1.3
C NC N/A U	PRECAST WALL PANELS: Precast wall panels are connected to the foundation.	5.7.3.4	A.5.3.6
C NC N/A U	UPLIFT AT PILE CAPS: Pile caps have top reinforcement, and piles are anchored to the pile caps.	5.7.3.5	A.5.3.8

continues

Table 17-28 *(Continued)*. **Collapse Prevention Structural Checklist for Building Types PC1 and PC1a**

Status	Evaluation Statement	Tier 2 Reference	Commentary Reference
C NC N/A U	GIRDERS: Girders supported by walls or pilasters have at least two ties securing the anchor bolts unless provided with independent stiff wall anchors with strength to resist the connection force calculated in the Quick Check procedure of Section 4.4.3.7.	5.7.4.2	A.5.4.2

Note: C = Compliant, NC = Noncompliant, N/A = Not Applicable, and U = Unknown.

Table 17-38. Nonstructural Checklist

Status	Evaluation Statement[a,b]	Tier 2 Reference	Commentary Reference
Life Safety Systems			
C NC N/A U	**HR—not required; LS—LMH; PR—LMH**. FIRE SUPPRESSION PIPING: Fire suppression piping is anchored and braced in accordance with NFPA-13.	13.7.4	A.7.13.1
C NC N/A U	**HR—not required; LS—LMH; PR—LMH**. FLEXIBLE COUPLINGS: Fire suppression piping has flexible couplings in accordance with NFPA-13.	13.7.4	A.7.13.2
C NC N/A U	**HR—not required; LS—LMH; PR—LMH**. EMERGENCY POWER: Equipment used to power or control Life Safety systems is anchored or braced.	13.7.7	A.7.12.1
C NC N/A U	**HR—not required; LS—LMH; PR—LMH**. STAIR AND SMOKE DUCTS: Stair pressurization and smoke control ducts are braced and have flexible connections at seismic joints.	13.7.6	A.7.14.1
C NC N/A U	**HR—not required; LS—MH; PR—MH**. SPRINKLER CEILING CLEARANCE: Penetrations through panelized ceilings for fire suppression devices provide clearances in accordance with NFPA-13.	13.7.4	A.7.13.3
C NC N/A U	**HR—not required; LS—not required; PR—LMH**. EMERGENCY LIGHTING: Emergency and egress lighting equipment is anchored or braced.	13.7.9	A.7.3.1
Hazardous Materials			
C NC N/A U	**HR—LMH; LS—LMH; PR—LMH**. HAZARDOUS MATERIAL EQUIPMENT: Equipment mounted on vibration isolators and containing hazardous material is equipped with restraints or snubbers.	13.7.1	A.7.12.2
C NC N/A U	**HR—LMH; LS—LMH; PR—LMH**. HAZARDOUS MATERIAL STORAGE: Breakable containers that hold hazardous material, including gas cylinders, are restrained by latched doors, shelf lips, wires, or other methods.	13.8.3	A.7.15.1
C NC N/A U	**HR—MH; LS—MH; PR—MH**. HAZARDOUS MATERIAL DISTRIBUTION: Piping or ductwork conveying hazardous materials is braced or otherwise protected from damage that would allow hazardous material release.	13.7.3 13.7.5	A.7.13.4
C NC N/A U	**HR—MH; LS—MH; PR—MH**. SHUTOFF VALVES: Piping containing hazardous material, including natural gas, has shutoff valves or other devices to limit spills or leaks.	13.7.3 13.7.5	A.7.13.3
C NC N/A U	**HR—LMH; LS—LMH; PR—LMH**. FLEXIBLE COUPLINGS: Hazardous material ductwork and piping, including natural gas piping, have flexible couplings.	13.7.3 13.7.5	A.7.15.4
C NC N/A U	**HR—MH; LS—MH; PR—MH**. PIPING OR DUCTS CROSSING SEISMIC JOINTS: Piping or ductwork carrying hazardous material that either crosses seismic joints or isolation planes or is connected to independent structures has couplings or other details to accommodate the relative seismic displacements.	13.7.3 13.7.5 13.7.6	A.7.13.6
Partitions			
C NC N/A U	**HR—LMH; LS—LMH; PR—LMH**. UNREINFORCED MASONRY: Unreinforced masonry or hollow-clay tile partitions are braced at a spacing of at most 10 ft (3.0 m) in Low or Moderate Seismicity, or at most 6 ft (1.8 m) in High Seismicity.	13.6.2	A.7.1.1
C NC N/A U	**HR—LMH; LS—LMH; PR—LMH**. HEAVY PARTITIONS SUPPORTED BY CEILINGS: The tops of masonry or hollow-clay tile partitions are not laterally supported by an integrated ceiling system.	13.6.2	A.7.2.1
C NC N/A U	**HR—not required; LS—MH; PR—MH**. DRIFT: Rigid cementitious partitions are detailed to accommodate the following drift ratios: in steel moment frame, concrete moment frame, and wood frame buildings, 0.02; in other buildings, 0.005.	13.6.2	A.7.1.2
C NC N/A U	**HR—not required; LS—not required; PR—MH**. LIGHT PARTITIONS SUPPORTED BY CEILINGS: The tops of gypsum board partitions are not laterally supported by an integrated ceiling system.	13.6.2	A.7.2.1
C NC N/A U	**HR—not required; LS—not required; PR—MH**. STRUCTURAL SEPARATIONS: Partitions that cross structural separations have seismic or control joints.	13.6.2	A.7.1.3

continues

Table 17-38 *(Continued)*. Nonstructural Checklist

Status	Evaluation Statement[a,b]	Tier 2 Reference	Commentary Reference
C NC N/A U	**HR—not required; LS—not required; PR—MH**. TOPS: The tops of ceiling-high framed or panelized partitions have lateral bracing to the structure at a spacing equal to or less than 6 ft (1.8 m).	13.6.2	A.7.1.4
Ceilings			
C NC N/A U	**HR—H; LS—MH; PR—LMH**. SUSPENDED LATH AND PLASTER: Suspended lath and plaster ceilings have attachments that resist seismic forces for every 12 ft^2 (1.1 m^2) of area.	13.6.4	A.7.2.3
C NC N/A U	**HR—not required; LS—MH; PR—LMH**. SUSPENDED GYPSUM BOARD: Suspended gypsum board ceilings have attachments that resist seismic forces for every 12 ft^2 (1.1 m^2) of area.	13.6.4	A.7.2.3
C NC N/A U	**HR—not required; LS—not required; PR—MH**. INTEGRATED CEILINGS: Integrated suspended ceilings with continuous areas greater than 144 ft^2 (13.4 m^2) and ceilings of smaller areas that are not surrounded by restraining partitions are laterally restrained at a spacing no greater than 12 ft (3.6 m) with members attached to the structure above. Each restraint location has a minimum of four diagonal wires and compression struts, or diagonal members capable of resisting compression.	13.6.4	A.7.2.2
C NC N/A U	**HR—not required; LS—not required; PR—MH**. EDGE CLEARANCE: The free edges of integrated suspended ceilings with continuous areas greater than 144 ft^2 (13.4 m^2) have clearances from the enclosing wall or partition of at least the following: in Moderate Seismicity, 1/2 in. (13 mm); in High Seismicity, 3/4 in. (19 mm).	13.6.4	A.7.2.4
C NC N/A U	**HR—not required; LS—not required; PR—MH**. CONTINUITY ACROSS STRUCTURE JOINTS: The ceiling system does not cross any seismic joint and is not attached to multiple independent structures.	13.6.4	A.7.2.5
C NC N/A U	**HR—not required; LS—not required; PR—H**. EDGE SUPPORT: The free edges of integrated suspended ceilings with continuous areas greater than 144 ft^2 (13.4 m^2) are supported by closure angles or channels not less than 2 in. (51 mm) wide.	13.6.4	A.7.2.6
C NC N/A U	**HR—not required; LS—not required; PR—H**. SEISMIC JOINTS: Acoustical tile or lay-in panel ceilings have seismic separation joints such that each continuous portion of the ceiling is no more than 2,500 ft^2 (232.3 m^2) and has a ratio of long-to-short dimension no more than 4-to-1.	13.6.4	A.7.2.7
Light Fixtures			
C NC N/A U	**HR—not required; LS—MH; PR—MH**. INDEPENDENT SUPPORT: Light fixtures that weigh more per square foot than the ceiling they penetrate are supported independent of the grid ceiling suspension system by a minimum of two wires at diagonally opposite corners of each fixture.	13.6.4 13.7.9	A.7.3.2
C NC N/A U	**HR—not required; LS—not required; PR—H**. PENDANT SUPPORTS: Light fixtures on pendant supports are attached at a spacing equal to or less than 6 ft. Unbraced suspended fixtures are free to allow a 360-degree range of motion at an angle not less than 45 degrees from horizontal without contacting adjacent components. Alternatively, if rigidly supported and/or braced, they are free to move with the structure to which they are attached without damaging adjoining components. Additionally, the connection to the structure is capable of accommodating the movement without failure.	13.7.9	A.7.3.3
C NC N/A U	**HR—not required; LS—not required; PR—H**. LENS COVERS: Lens covers on light fixtures are attached with safety devices.	13.7.9	A.7.3.4
Cladding and Glazing			
C NC N/A U	**HR—MH; LS—MH; PR—MH**. CLADDING ANCHORS: Cladding components weighing more than 10 lb/ft^2 (0.48 kN/m^2) are mechanically anchored to the structure at a spacing equal to or less than the following: for Life Safety in Moderate Seismicity, 6 ft (1.8 m); for Life Safety in High Seismicity and for Position Retention in any seismicity, 4 ft (1.2 m)	13.6.1	A.7.4.1

continues

Table 17-38 *(Continued)*. Nonstructural Checklist

Status	Evaluation Statement[a,b]	Tier 2 Reference	Commentary Reference
C NC N/A U	HR—not required; **LS—MH; PR—MH**. CLADDING ISOLATION: For steel or concrete moment-frame buildings, panel connections are detailed to accommodate a story drift ratio by the use of rods attached to framing with oversize holes or slotted holes of at least the following: for Life Safety in Moderate Seismicity, 0.01; for Life Safety in High Seismicity and for Position Retention in any seismicity, 0.02, and the rods have a length-to-diameter ratio of 4.0 or less.	13.6.1	A.7.4.3
C NC N/A U	**HR—MH; LS—MH; PR—MH**. MULTI-STORY PANELS: For multi-story panels attached at more than one floor level, panel connections are detailed to accommodate a story drift ratio by the use of rods attached to framing with oversize holes or slotted holes of at least the following: for Life Safety in Moderate Seismicity, 0.01; for Life Safety in High Seismicity and for Position Retention in any seismicity, 0.02, and the rods have a length-to-diameter ratio of 4.0 or less.	13.6.1	A.7.4.4
C NC N/A U	HR—not required; **LS—MH; PR—MH**. THREADED RODS: Threaded rods for panel connections detailed to accommodate drift by bending of the rod have a length-to-diameter ratio greater than 0.06 times the story height in inches for Life Safety in Moderate Seismicity and 0.12 times the story height in inches for Life Safety in High Seismicity and Position Retention in any seismicity.	13.6.1	A.7.4.9
C NC N/A U	**HR—MH; LS—MH; PR—MH**. PANEL CONNECTIONS: Cladding panels are anchored out of plane with a minimum number of connections for each wall panel, as follows: for Life Safety in Moderate Seismicity, 2 connections; for Life Safety in High Seismicity and for Position Retention in any seismicity, 4 connections.	13.6.1.4	A.7.4.5
C NC N/A U	**HR—MH; LS—MH; PR—MH**. BEARING CONNECTIONS: Where bearing connections are used, there is a minimum of two bearing connections for each cladding panel.	13.6.1.4	A.7.4.6
C NC N/A U	**HR—MH; LS—MH; PR—MH**. INSERTS: Where concrete cladding components use inserts, the inserts have positive anchorage or are anchored to reinforcing steel.	13.6.1.4	A.7.4.7
C NC N/A U	HR—not required; **LS—MH; PR—MH**. OVERHEAD GLAZING: Glazing panes of any size in curtain walls and individual interior or exterior panes more than 16 ft^2 (1.5 m^2) in area are laminated annealed or laminated heat-strengthened glass and are detailed to remain in the frame when cracked.	13.6.1.5	A.7.4.8
Masonry Veneer			
C NC N/A U	HR—not required; **LS—LMH; PR—LMH**. TIES: Masonry veneer is connected to the backup with corrosion-resistant ties. There is a minimum of one tie for every 2-2/3 ft^2 (0.25 m^2), and the ties have spacing no greater than the following: for Life Safety in Low or Moderate Seismicity, 36 in. (914 mm); for Life Safety in High Seismicity and for Position Retention in any seismicity, 24 in. (610 mm).	13.6.1.2	A.7.5.1
C NC N/A U	HR—not required; **LS—LMH; PR—LMH**. SHELF ANGLES: Masonry veneer is supported by shelf angles or other elements at each floor above the ground floor.	13.6.1.2	A.7.5.2
C NC N/A U	HR—not required; **LS—LMH; PR—LMH**. WEAKENED PLANES: Masonry veneer is anchored to the backup adjacent to weakened planes, such as at the locations of flashing.	13.6.1.2	A.7.5.3
C NC N/A U	**HR—LMH; LS—LMH; PR—LMH**. UNREINFORCED MASONRY BACKUP: There is no unreinforced masonry backup.	13.6.1.1 13.6.1.2	A.7.7.2
C NC N/A U	HR—not required; **LS—MH; PR—MH**. STUD TRACKS: For veneer with cold-formed steel stud backup, stud tracks are fastened to the structure at a spacing equal to or less than 24 in. (610 mm) on center.	13.6.1.1 13.6.1.2	A.7.6.1

continues

Table 17-38 *(Continued)*. Nonstructural Checklist

Status	Evaluation Statement[a,b]	Tier 2 Reference	Commentary Reference
C NC N/A U	**HR—not required; LS—MH; PR—MH**. ANCHORAGE: For veneer with concrete block or masonry backup, the backup is positively anchored to the structure at a horizontal spacing equal to or less than 4 ft along the floors and roof.	13.6.1.1 13.6.1.2	A.7.7.1
C NC N/A U	**HR—not required; LS—not required; PR—MH**. WEEP HOLES: In veneer anchored to stud walls, the veneer has functioning weep holes and base flashing.	13.6.1.2	A.7.5.6
C NC N/A U	**HR—not required; LS—not required; PR—MH**. OPENINGS: For veneer with cold-formed-steel stud backup, steel studs frame window and door openings.	13.6.1.1 13.6.1.2	A.7.6.2
Parapets, Cornices, Ornamentation, and Appendages			
C NC N/A U	**HR—LMH; LS—LMH; PR—LMH**. URM PARAPETS OR CORNICES: Laterally unsupported unreinforced masonry parapets or cornices have height-to-thickness ratios no greater than the following: for Life Safety in Low or Moderate Seismicity, 2.5; for Life Safety in High Seismicity and for Position Retention in any seismicity, 1.5.	13.6.5	A.7.8.1
C NC N/A U	**HR—not required; LS—LMH; PR—LMH**. CANOPIES: Canopies at building exits are anchored to the structure at a spacing no greater than the following: for Life Safety in Low or Moderate Seismicity, 10 ft (3.0 m); for Life Safety in High Seismicity and for Position Retention in any seismicity, 6 ft (1.8 m).	13.6.6	A.7.8.2
C NC N/A U	**HR—H; LS—MH; PR—LMH**. CONCRETE PARAPETS: Concrete parapets with height-to-thickness ratios greater than 2.5 have vertical reinforcement.	13.6.5	A.7.8.3
C NC N/A U	**HR—MH; LS—MH; PR—LMH**. APPENDAGES: Cornices, parapets, signs, and other ornamentation or appendages that extend above the highest point of anchorage to the structure or cantilever from components are reinforced and anchored to the structural system at a spacing equal to or less than 6 ft (1.8 m). This evaluation statement item does not apply to parapets or cornices covered by other evaluation statements.	13.6.6	A.7.8.4
Masonry Chimneys			
C NC N/A U	**HR—LMH; LS—LMH; PR—LMH**. URM CHIMNEYS: Unreinforced masonry chimneys extend above the roof surface no more than the following: for Life Safety in Low or Moderate Seismicity, 3 times the least dimension of the chimney; for Life Safety in High Seismicity and for Position Retention in any seismicity, 2 times the least dimension of the chimney.	13.6.7	A.7.9.1
C NC N/A U	**HR—LMH; LS—LMH; PR—LMH**. ANCHORAGE: Masonry chimneys are anchored at each floor level, at the topmost ceiling level, and at the roof.	13.6.7	A.7.9.2
Stairs			
C NC N/A U	**HR—not required; LS—LMH; PR—LMH**. STAIR ENCLOSURES: Hollow-clay tile or unreinforced masonry walls around stair enclosures are restrained out of plane and have height-to-thickness ratios not greater than the following: for Life Safety in Low or Moderate Seismicity, 15-to-1; for Life Safety in High Seismicity and for Position Retention in any seismicity, 12-to-1.	13.6.2 13.6.8	A.7.10.1
C NC N/A U	**HR—not required; LS—LMH; PR—LMH**. STAIR DETAILS: The connection between the stairs and the structure does not rely on post-installed anchors in concrete or masonry, and the stair details are capable of accommodating the drift calculated using the Quick Check procedure of Section 4.4.3.1 for moment-frame structures or 0.5 in. for all other structures without including any lateral stiffness contribution from the stairs.	13.6.8	A.7.10.2
Contents and Furnishings			
C NC N/A U	**HR—LMH; LS—MH; PR—MH**. INDUSTRIAL STORAGE RACKS: Industrial storage racks or pallet racks more than 12 ft high meet the requirements of ANSI/RMI MH 16.1 as modified by ASCE 7, Chapter 15.	13.8.1	A.7.11.1

continues

Table 17-38 *(Continued)*. Nonstructural Checklist

Status	Evaluation Statement[a,b]	Tier 2 Reference	Commentary Reference
C NC N/A U	**HR—not required; LS—H; PR—MH**. TALL NARROW CONTENTS: Contents more than 6 ft (1.8 m) high with a height-to-depth or height-to-width ratio greater than 3-to-1 are anchored to the structure or to each other.	13.8.2	A.7.11.2
C NC N/A U	**HR—not required; LS—H; PR—H**. FALL-PRONE CONTENTS: Equipment, stored items, or other contents weighing more than 20 lb (9.1 kg) whose center of mass is more than 4 ft (1.2 m) above the adjacent floor level are braced or otherwise restrained.	13.8.2	A.7.11.3
C NC N/A U	**HR—not required; LS—not required; PR—MH**. ACCESS FLOORS: Access floors more than 9 in. (229 mm) high are braced.	13.6.10	A.7.11.4
C NC N/A U	**HR—not required; LS—not required; PR—MH**. EQUIPMENT ON ACCESS FLOORS: Equipment and other contents supported by access floor systems are anchored or braced to the structure independent of the access floor.	13.7.7 13.6.10	A.7.11.5
C NC N/A U	**HR—not required; LS—not required; PR—H**. SUSPENDED CONTENTS: Items suspended without lateral bracing are free to swing from or move with the structure from which they are suspended without damaging themselves or adjoining components.	13.8.2	A.7.11.6
Mechanical and Electrical Equipment			
C NC N/A U	**HR—not required; LS—H; PR—H**. FALL-PRONE EQUIPMENT: Equipment weighing more than 20 lb (9.1 kg) whose center of mass is more than 4 ft (1.2 m) above the adjacent floor level, and which is not in-line equipment, is braced.	13.7.1 13.7.7	A.7.12.4
C NC N/A U	**HR—not required; LS—H; PR—H**. IN-LINE EQUIPMENT: Equipment installed in line with a duct or piping system, with an operating weight more than 75 lb (34.0 kg), is supported and laterally braced independent of the duct or piping system.	13.7.1	A.7.12.5
C NC N/A U	**HR—not required; LS—H; PR—MH**. TALL NARROW EQUIPMENT: Equipment more than 6 ft (1.8 m) high with a height-to-depth or height-to-width ratio greater than 3-to-1 is anchored to the floor slab or adjacent structural walls.	13.7.1 13.7.7	A.7.12.6
C NC N/A U	**HR—not required; LS—not required; PR—MH**. MECHANICAL DOORS: Mechanically operated doors are detailed to operate at a story drift ratio of 0.01.	13.6.9	A.7.12.7
C NC N/A U	**HR—not required; LS—not required; PR—H**. SUSPENDED EQUIPMENT: Equipment suspended without lateral bracing is free to swing from or move with the structure from which it is suspended without damaging itself or adjoining components.	13.7.1 13.7.7	A.7.12.8
C NC N/A U	**HR—not required; LS—not required; PR—H**. VIBRATION ISOLATORS: Equipment mounted on vibration isolators is equipped with horizontal restraints or snubbers and with vertical restraints to resist overturning.	13.7.1	A.7.12.9
C NC N/A U	**HR—not required; LS—not required; PR—H**. HEAVY EQUIPMENT: Floor-supported or platform-supported equipment weighing more than 400 lb (181.4 kg) is anchored to the structure.	13.7.1 13.7.7	A.7.12.10
C NC N/A U	**HR—not required; LS—not required; PR—H**. ELECTRICAL EQUIPMENT: Electrical equipment is laterally braced to the structure.	13.7.7	A.7.12.11
C NC N/A U	**HR—not required; LS—not required; PR—H**. CONDUIT COUPLINGS: Conduit greater than 2.5 in. (64 mm) trade size that is attached to panels, cabinets, or other equipment and is subject to relative seismic displacement has flexible couplings or connections.	13.7.8	A.7.12.12
Piping			
C NC N/A U	**HR—not required; LS—not required; PR—H**. FLEXIBLE COUPLINGS: Fluid and gas piping has flexible couplings.	13.7.3 13.7.5	A.7.13.2

continues

Table 17-38 *(Continued)*. Nonstructural Checklist

Status	Evaluation Statement[a,b]	Tier 2 Reference	Commentary Reference
C NC N/A U	**HR—not required; LS—not required; PR—H**. FLUID AND GAS PIPING: Fluid and gas piping is anchored and braced to the structure to limit spills or leaks.	13.7.3 13.7.5	A.7.13.4
C NC N/A U	**HR—not required; LS—not required; PR—H**. C-CLAMPS: One-sided C-clamps that support piping larger than 2.5 in. (64 mm) in diameter are restrained.	13.7.3 13.7.5	A.7.13.5
C NC N/A U	**HR—not required; LS—not required; PR—H**. PIPING CROSSING SEISMIC JOINTS: Piping that crosses seismic joints or isolation planes or is connected to independent structures has couplings or other details to accommodate the relative seismic displacements.	13.7.3 13.7.5	A.7.13.6
Ducts			
C NC N/A U	**HR—not required; LS—not required; PR—H**. DUCT BRACING: Rectangular ductwork larger than 6 ft^2 (0.56 m^2) in cross-sectional area and round ducts larger than 28 in. (711 mm) in diameter are braced. The maximum spacing of transverse bracing does not exceed 30 ft (9.2 m). The maximum spacing of longitudinal bracing does not exceed 60 ft (18.3 m).	13.7.6	A.7.14.2
C NC N/A U	**HR—not required; LS—not required; PR—H**. DUCT SUPPORT: Ducts are not supported by piping or electrical conduit.	13.7.6	A.7.14.3
C NC N/A U	**HR—not required; LS—not required; PR—H**. DUCTS CROSSING SEISMIC JOINTS: Ducts that cross seismic joints or isolation planes or are connected to independent structures have couplings or other details to accommodate the relative seismic displacements.	13.7.6	A.7.14.4
Elevators			
C NC N/A U	**HR—not required; LS—H; PR—H**. RETAINER GUARDS: Sheaves and drums have cable retainer guards.	13.7.11	A.7.16.1
C NC N/A U	**HR—not required; LS—H; PR—H**. RETAINER PLATE: A retainer plate is present at the top and bottom of both car and counterweight.	13.7.11	A.7.16.2
C NC N/A U	**HR—not required; LS—not required; PR—H**. ELEVATOR EQUIPMENT: Equipment, piping, and other components that are part of the elevator system are anchored.	13.7.11	A.7.16.3
C NC N/A U	**HR—not required; LS—not required; PR—H**. SEISMIC SWITCH: Elevators capable of operating at speeds of 150 ft/min (0.30 m/min) or faster are equipped with seismic switches that meet the requirements of ASME A17.1 or have trigger levels set to 20% of the acceleration of gravity at the base of the structure and 50% of the acceleration of gravity in other locations.	13.7.11	A.7.16.4
C NC N/A U	**HR—not required; LS—not required; PR—H**. SHAFT WALLS: Elevator shaft walls are anchored and reinforced to prevent toppling into the shaft during strong shaking.	13.7.11	A.7.16.5
C NC N/A U	**HR—not required; LS—not required; PR—H**. COUNTERWEIGHT RAILS: All counterweight rails and divider beams are sized in accordance with ASME A17.1.	13.7.11	A.7.16.6
C NC N/A U	**HR—not required; LS—not required; PR—H**. BRACKETS: The brackets that tie the car rails and the counterweight rail to the structure are sized in accordance with ASME A17.1.	13.7.11	A.7.16.7
C NC N/A U	**HR—not required; LS—not required; PR—H**. SPREADER BRACKET: Spreader brackets are not used to resist seismic forces.	13.7.11	A.7.16.8
C NC N/A U	**HR—not required; LS—not required; PR—H**. GO-SLOW ELEVATORS: The building has a go-slow elevator system.	13.7.11	A.7.16.9

Note: C = Compliant, NC = Noncompliant, N/A = Not Applicable, and U = Unknown.
[a] Performance Level: HR = Hazards Reduced, LS = Life Safety, and PR = Position Retention.
[b] Level of Seismicity: L = Low, M = Moderate, and H = High.

APPENDIX E: QUICK CHECK HAND CALCULATIONS

Project Calcs

tk1sc

Project Name:	Project No.:
Computed by:	Date:
	Page:
Checked by:	

OVERTURNING

$S_{XS} = 0.778g$
$S_{X1} = 0.570g$
$T = C_t h_n^{\beta}$

→ At Wood Building

$C_t = 0.02$
$\beta = 0.75$
$h_n = 12'$

$T = 0.02 \times 12^{0.75} = 0.129$

$S_a = \frac{0.57}{0.129} = 4.42 \leq 0.778g$

$0.6S_a = 0.6 \times 0.778g = 0.467$

$B/h = \frac{76'}{12'} = 6.33 >> 0.467$ OK

→ At Gym

$C_t = 0.02$
$\beta = 0.75$
$h_n = 30'$

$T = 0.02 \times 30^{0.75} = 0.256$

$S_a = \frac{0.57}{0.256} = 2.23 \leq 0.778g$, $0.6S_a = 0.467$

$B/h = 98'/30' = 3.27 >> 0.467$ OK

Project Calcs

tk1sc

Project Name:	Project No.:
Computed by:	Date:
	Page:
Checked by:	

WALL STRESS CHECK

Roof DL = 20psf
Conc Wall DL = 6" x 150pcf = 75psf
Wood Wall DL = 8psf

Trans Conc Wall Length = 307 ft
Long Conc Wall Length = 467 ft

Trans Wood Wall Length = 780 ft
Long Wood Wall Length = 507 ft

Conc Wall Trib Height = 15'
Wood Wall Trib Height = 6'

$\Rightarrow W = 20psf \times 65{,}000ft^2 + 75psf \times 15' \times (307' + 467') + 8psf \times 6' \times (780' + 507')$

$= 2233k$

→ Wood Wall Check

$C = 1.3$
$V = 1.3 \times 0.778 \times 2233k = 2258k$

Conc walls are stronger than wood and diaphragms are flexible. Assume force is distributed evenly between wood and conc.

$L_{Trans} = 307 ft + 780 ft = 1087 ft$
$L_{Long} = 467 ft + 507 ft = 974 ft$ ← Governs

$M_s = \frac{4.5+3}{2} = 3.75$

Project Calcs

tk1sc

Project Name:	Project No.:
Computed by:	Date:
	Page:
Checked by:	

$v_j^{Avg} = \frac{1}{3.75} \times \frac{2258k}{974ft} = 618\ plf$

Capacity w/ Structural Panel Sheathing = 1000 plf > v_i^{Avg}

OK

→ Conc Wall Check

Assume Concrete takes entire weight of building

Transverse Direction Governs

C = 1.0

V = 1.0 × 0.778 × 2233k = 1737k

Wall thickness = 6"

$v_j^{Avg} = \frac{1}{3.75} \times \frac{1737k}{307ft \times 6in} = 21\ psi$

Concrete Tier 1 Capacity = 100 psi > v_j^{Avg} OK

APPENDIX F: COST ESTIMATE

COST SUMMARY ESTIMATE

Description		Unit Cost	Number of Units		Total Cost
Wood shear wall improvements	$	450.00	1225	lf	$ 551,250.00
Wood wall diaphragm connection improvements	$	75.00	1225	lf	$ 91,875.00
Wood shear wall foundation connections	$	75.00	1225	lf	$ 91,875.00
Tectum diaphragm Improvement	$	15.00	12000	sf	$ 180,000.00
Diaphragm blocking	$	25.00	25000	sf	$ 625,000.00
Tilt-up wall diaphragm connection improvements	$	150.00	800	lf	$ 120,000.00
Geotechnical study	$	7,500.00	1	ea	$ 7,500.00
Shut off valves and flexible couplings	$	10,000.00	1	ea	$ 10,000.00
			Sub Total	=	$ 1,677,500.00
			Soft Costs	=	$ 671,000.00
			Total Cost	**=**	**$ 2,348,500.00**

Note:
This estimate includes allowances for selective demolition and modest replacement of architectural materials, including wall finishes, trim, and roofing.

Contact Us

IBI Group Architects (USA), Inc.
907 SW Harvey Milk Street
Portland, OR 97205

tel 503 226 6950
fax 503 273 9192
ibigroup-edpnw.com

Gervais School District
290 First Street
Gervais, OR 97026

tel 503 792 3803
gervais.k12.or.us